CODING FORM FOR SRC INDEXING REVISED 10/15/86

Microfiche No.		
OTS0518525-1		
New Doc I.D.	Old Doc I.D.	
	8EHQ-0889-0820	
Date Produced	Date Recieved	TSCA section
11/03/89		8E
Submitting Organization		
U S EPA		
Contractor		
Document Title		
USEPA STATUS REPORT: ELEMENTAL PHOSPHORUS WITH COVER LETTER DATED 112989		
Chemical Category		
ELEMENTAL PHOSPHORUS		

UNITED STATES ENVIRONMENTAL PROTECTION AGENCY
WASHINGTON, D.C. 20460

PUBLIC BE
FILE COPY

NOV 29 1989

OFFICE OF
PESTICIDES AND TOXIC SUBSTANCES

CERTIFIED MAIL

Dr. J. R. Condray
Director
Regulatory Management
Monsanto Company
800 N. Lindbergh Boulevard
St. Louis, Missouri 63167

Dear Sir:

With regard to:

TSCA Section 8(e) submission on: Elemental Phosphorus

Submitted by: Monsanto Company (on behalf of the Ad-Hoc Committee of Phosphorus Manufacturers)

Date submitted: August 24, 1989

EPA Document Control Number: 8EHQ-0889-0820 ✓

"For Your Information" Notice on: Elemental Phosphorus

Submitted by: Monsanto Company

Date submitted: June 11, 1985

EPA Document Control Number: FYI-OTS-0785-0423

The Office of Toxic Substances (OTS) has completed a preliminary evaluation of the above referenced TSCA Section 8(e) and "For Your Information" (FYI) submissions concerning elemental phosphorus. The enclosed status report is the result of that preliminary OTS evaluation but does not necessarily represent EPA's conclusion on this chemical substance. EPA asks that you ensure that a copy of the enclosed status report is forwarded to each company on whose behalf the above referenced Section 8(e) notice was submitted.

In order for the Agency to evaluate the overall significance of the reported toxicologic findings, please submit complete copies of the final reports (including the actual experimental protocols, results of gross/histopathological examinations, results of any statistical analyses, etc.) from the one-generation reproduction studies cited in the above referenced Section 8(e) and FYI submissions.

Regarding the referenced FYI notice, it is EPA's initial position that the parturition-related toxic effects decribed therein should have been submitted under Section 8(e) of TSCA. The basis for this Agency position on the Section 8(e)-applicability/reportability of the subject findings can be found in the **COMMENTS/RECOMMENDATIONS** section of the enclosed status report. Considering EPA's position in this matter, Monsanto is asked to provide (within 20 working days) its rationale as to why the toxicologic information contained in FYI-OTS-0785-0423 was not submitted to EPA under Section 8(e) of TSCA.

In view of EPA's general interest in corporate actions that are taken on a voluntary basis in response to chemical toxicity or exposure data, please describe the actions that Monsanto and other members of the "Ad-Hoc Committee of Phosphorus Manufacturers" have taken or plan to take 1) to notify workers and others about the reported toxicological findings, and 2) to reduce or eliminate the exposure to elemental phosphorus. In addition, please describe the nature and results, if available, of all studies (other than those submitted already to EPA or those published in the open scientific literature) about which Monsanto and the other "Ad-Hoc Committee" member companies are aware or that Monsanto or those companies have conducted, are conducting, or plan to conduct that are designed to determine the toxicity of or the exposure to elemental phosphorus.

In responding to this request for information, or in otherwise communicating with EPA about the referenced TSCA Section 8(e) and FYI submissions, please refer to the respective Document Control Numbers assigned to those submissions. As in the case of initial FYI and TSCA Section 8(e) submissions, all responses/correspondence will be placed in the Agency's public files unless confidentiality is claimed according to the procedures outlined in Part X of EPA's TSCA Section 8(e) policy statement ("Statement of Interpretation and Enforcement Policy; Notification of Substantial Risk" 43 FR 11110; March 16, 1978). Any claims for confidentiality should be supported by submission of information as described in the enclosed item entitled "Support Information for Confidentiality Claims."

Unless specified otherwise, all available information requested by my letter should be transmitted to the Office of Toxic Substances (OTS) Document Processing Center at the following address within 20 working days of your receipt of my letter; any requested information or supplemental information that may become available after your response to my letter should be sent to the Agency immediately upon receipt of such information.

Document Processing Center (TS-790)
(Attn: Section 8(e) Coordinator)
Office of Toxic Substances
U.S. Environmental Protection Agency
401 "M" Street, S.W.
Washington, D.C. 20460

Should you have any questions or comments prior to responding to EPA's request for information, please contact Mr. Frank D. Kover, Chief, Chemical Screening Branch/ECAD at (202)-382-3436.

The U.S. Environmental Protection Agency looks forward to continued cooperation with Monsanto and the other corporate members of the "Ad-Hoc Committee of Phosphorus Manufacturers" in ongoing efforts to evaluate and minimize the potential risks posed by chemicals to health or the environment.

Sincerely,

Charles M. Auer
Acting Director
Existing Chemical
Assessment Division

Enclosures

UNITED STATES ENVIRONMENTAL PROTECTION AGENCY

WASHINGTON, DC 20460

Public BE

FILE COPY

OFFICE OF PESTICIDES AND TOXIC SUBSTANCES

DATE: NOV - 3 1989 **APPROVED:** 11/17/89

SUBJECT: Status Report[1] 8EHQ-0889-0820 INIT ✓
8EHQ-0889-0820 SUPP
FYI-OTS-0785-0423 INIT

FROM: Frank D. Kover, Branch Chief
Chemical Screening Branch/ECAD

TO: Charles M. Auer, Acting Director
Existing Chemical Assessment Division/OTS

SUBMISSION DESCRIPTION

On behalf of the "Ad-Hoc Committee of Phosphorus Manufacturers," the Monsanto Company submitted preliminary findings from a one-generation rat reproduction study of elemental phosphorus (CAS No. 7723-14-0). (The Committee's member companies, who manufacture, import or distribute elemental phosphorus in the U.S., are listed on the last page (Page 9) of this status report.) In its TSCA Section 8(e) submission (8EHQ-0889-0820 INIT), Monsanto provided the following summary information about the conduct and preliminary results of this one-generation reproduction study:

> "In this study, elemental phosphorus was administered by gavage in either corn oil or tricaprylin at a dose level of 0.075 mg/kg/day to rats 100 days prior to mating, through mating, and either through day 15 of gestation or throughout gestation. The preliminary results show the occurrence of deaths in treated dams during the last two days of gestation and during parturition. A similar effect was seen in rats dosed throughout gestation and those withdrawn from treatment after gestation day 15."

---

[1] *This status report is the result of a preliminary evaluation of information that has been submitted to EPA under Section 8(e), the "substantial risk" information reporting provision of the Toxic Substances Control Act (TSCA), as well as on a "For Your Information" (FYI) basis. The statements made in this status report should not be regarded as expressing final Agency policy or intent with respect to the subject chemical. Any review of this status report should take into account that the report may be based on incomplete information.*

In a supplemental Section 8(e) notice (8EHQ-0889-0820 SUPP), the FMC Corporation stated that FMC concurred in Monsanto's submission of the subject information to EPA under Section 8(e) of TSCA.

It should be noted that the Agency previously received a "For Your Information" (FYI) notice (FYI-OTS-0785-0423) in which the Monsanto Company submitted the following summary information with regard to the conduct and results of a one-generation reproduction study of elemental phosphorus in rats:

"Methods

"Elemental yellow phosphorus (Elemental P) in corn oil was administered by gavage to three groups of 15 male and 30 female 8 week-old Sprague-Dawley derived . . . rats at dosage levels of 0.005, 0.015, [or] 0.075 mg/Kg/day. All [of the] animals received a constant volume of corn oil, 5.0 ml/Kg/day. Treatment began 80 days prior to mating and continued throughout mating, gestation and lactation periods. A control group of 15 males and 30 female rats received the vehicle, corn oil, and a comparable regimen. While this study was originally designed to be a one-litter, one-generation reproduction study, because of low fertility in all groups in the first litter, the study was extended to a two-litter, one-generation study. [The] dosing was continued between the two mating periods. All adult and weaning animals were observed for mortality and clinical signs of toxicity twice daily. Detailed physical examinations were performed weekly. Male body weights were recorded weekly. Female body weights were recorded weekly and on days 0, 6, 13 and 20 of gestation, [and] on days 0, 4, 14, and 21 of lactation. Adult food consumption was measured weekly except during mating for males and females. Females were smeared for ten days prior to mating to establish estrous cycle. Smearing was continued until evidence of copulation [was] observed. Pups were examined twice daily and counted on days 0, 4, 14 and 21 of lactation. [The] individual pup weights were recorded on days 0, 4, 14 and 21 of lactation.

"All [of the] pups were sacrificed at weaning while the parental animals were sacrificed after weaning of [the] F_1b litter. Complete post-mortem examinations were performed on 10 F_0 parental males per group, all F_0 parental females, all F_0 females which did not deliver litters, 10 F_1b pups per sex per group, 5 F_1a pups per sex per group and all animals that died on study or were killed in a moribund condition. All other animals were examined externally, sacrificed by carbon dioxide asphyxiation and discarded. . . . .

"Results

"The incidence of mortality among control, low, mid and high level male rats was 1, 2, 0 and 0, respectively. These deaths were not considered to be related to [the] administration of test compound. Mortality among female rats was 4, 1, 1 and 16 for the control, low, mid- and high dosage groups, respectively. While the exact cause of deaths in the high dosage group is not known (except for one female which died of rupture of uterine walls), these deaths are considered to be related to difficulty at parturition because seven females died on gestation day 21 or 22 after F_1a mating and six females died on the last two days of gestation after F_1b matings. There was no evidence of difficulty in giving birth in the 0.015 and 0.005 mg/Kg dosage groups. There were no apparent clinical signs of toxicity among animals treated with Elemental P except for hair loss on both forelimbs in the 0.075 mg/Kg/day dosage group.

"Mean body weights for F_0 males in the low and mid-dosage group, while not statistically different, were slightly lower than controls throughout the study. In the high dosage group, mean body weights of male rats were comparable to controls for the first part of the study (15 weeks) but appeared to be lower than controls for the latter part of the study. However, there was no dose-related decrease and thus the significance of these changes is unknown. Mean body weights in females treated with Elemental P were considered to be comparable to controls. F_0 mean body weights of treated females were comparable to controls during gestation and lactation for both litters. [The] food consumption data for treated rats were also comparable to controls throughout the study.

"While there was no significant difference in male and female fertility indices in the control and treated groups, the fertility index for male and female [rats] in all groups for the F_1a mating was low. The lowest values [observed] occurred in the control group; the male and female fertility index in the control group 73.3 and 60.0, respectively. These values were just outside the historical range at . . . [the testing laboratory]. Thus a decision was made to mate the parental animals for one more litter. Male and female fertility indices of treated animals for the F_1b matings were comparable to controls. Estrous cycle determined prior to F_1a and F_1b matings showed occasional irregularities (prolonged estrous and post-estrous) at equal frequencies in control and treated groups. The mean length of gestation in the treated groups was comparable to controls.

"Mean number of viable pups in the F_1a litter at 0.075 mg/Kg/day were slightly lower than controls, but this change was not statistically significant. There was a concomitant slight increase in the mean number of dead pups in the F_1a litter. [A] similar trend was also observed in the F_1b litter. Mean numbers of viable and dead pups in the low and mid-dosage level animals for both the F_1a and F_1b litters were comparable to controls. Pup survival through weaning for both F_1a and F_1b litters for all treated groups was comparable to controls.

"Mean pup weights at birth and throughout lactation were comparable to controls. The appearance and behavior of pups at birth and throughout lactation was not adversely affected by treatment with Elemental P.

"There were no compound-related gross changes at necropsy of the F_0, F_1a or F_1b generations. There were no compound-related microscopic changes [observed] in the F_0 and F_1b generations.

"Conclusions

"[The] administration of Elemental P at a dosage level of 0.075 mg/Kg/day adversely affected parturition for both litters. Mean number of live pups was also slightly reduced in the 0.075 mg/Kg/day dosage group. The no-observable-adverse-effect-level [(i.e., NOAEL)] in this study was considered to be 0.015 mg/Kg/day."

In submitting the preceding information to EPA on an FYI basis, Monsanto noted that "while certain toxic effects of exposure to phosphorus are well known," the adverse parturition-related effect described in the submitted report may not be well known. Monsanto also acknowledged the fact that "difficulty at parturition is an infrequently observed event in rat reproduction studies." Further, Monsanto stated specifically that the "administration of 0.075 mg/Kg/day of elemental phosphorus in corn oil to rats for 80 days prior to mating, during mating and gestation was considered to have resulted in difficulty in delivery, so much so that 13 females in this group died on gestation days 21 or 22 (seven females during generation of a first litter and six females during generation of a second litter)." Monsanto also presented the following hypothesis with regard to the influence that the corn oil vehicle may have exerted on phosphorus bioavailability during the study:

"The corn oil vehicle used to prevent reaction of the phosphorus with gastric juices and intestinal fluids probably influenced the tissue bioavailability of [the] phosphorus. It may not only have protected phosphorus from degradation to phosphate ion, but may have permitted relatively small amounts of phosphorus to have direct access to cells."

In conclusion, Monsanto offered the following information regarding the significance of the findings reported to EPA on an FYI basis, rather than under Section 8(e), the "substantial risk" information reporting provision of the Toxic Substances Control Act (TSCA):

> "This information does not indicate that [elemental] yellow phosphorus presents a substantial risk of injury to health of the environment because it is extremely unlikely that anyone would ingest phosphorus at levels sufficiently high to result in adverse effects."

SUBMISSION EVALUATION

TSCA Section 8(e) Submission

Based on a preliminary evaluation of Monsanto's TSCA Section 8(e) submission, which consists of a brief written summary and some data tables, the performed one-generation reproduction study provides evidence of the maternal and developmental toxicity of elemental phosphorus. In this study, elemental phosphorus was tested at a single dosage level of 0.075 mg/kg/day in corn oil or tricaprylin as follows:

Group	Vehicle	Phosphorus	Duration of Treatment
1	corn oil	0	throughout gestation
2	corn oil	0.075 mg/kg	throughout gestation
3	corn oil	0.075 mg/kg	until day 15 of gestation
4	tricaprylin	0	throughout gestation
5	tricaprylin	0.075 mg/kg	throughout gestation

Although the submitted summary provides no evidence that there was a treatment-related effect on male fertility, female fertility was found to be slightly reduced in all phosphorus-treated groups (the pregnancy rate was ~8-10% less than controls). The most significant finding was increased mortality of dams during the last few days of pregnancy and during parturition. The increased mortality was observed in those groups receiving phosphorus in either corn oil or tricaprylin throughout gestation, as well as in the single group in which treatment with phosphorus in corn oil was stopped on day 15 of gestation. In group 2, 6 dams died on gestation day 21, 1 on day 22, and 1 on day 23. In group 3, 5 dams died on day 21 and 3 on day 22. In group 5, 4 dams died on day 21 and 2 on day 22. No parturition-related deaths occurred in either the corn oil or

tricaprylin control groups. In this study, there was also some evidence of developmental toxicity in that the mean litter sizes of the phosphorus-treated groups were found to be slightly reduced compared to their respective control groups. The mean litter sizes for test groups 2 and 3 were 9.7 and 11.7, respectively, while the litter size in the corn oil control group (group 1) was 12.8; the mean litter size of group 5 was 11.8, while litter size in the tricaprylin control group (group 4) was 12.9. At the time that Monsanto submitted the preliminary report to the Agency, this one-generation reproduction study was still in the lactation period of the F_1 pups and further information about the pup body weights and pup survival was not yet available.

FYI Submission

In the FYI submission, Monsanto provided summary results of a one-generation rat reproduction study of elemental phosphorus. This FYI submission consisted only of a cover letter and a short summary report of the study; none of the actual data were provided. In this previous study, elemental phosphorus was administered to rats by gavage at doses of 0, 0.005, 0.015, or 0.075 mg/kg/day in corn oil. According to the summary, there were no effects on male or female fertility, or on body weight, and there were apparently no clinical signs of toxicity. However, in the high-dose group (0.075 mg/kg/day), there was an increase in mortality of dams prior to or during parturition. This is the same result as that obtained in the study cited in Monsanto's current Section 8(e) submission. The FYI submission summary also states that the litter size was slightly reduced in the high-dose group (again, a similar result to that reported in the current Section 8(e) submission), but that pup weight, survival, appearance and behavior of treated pups were found to be comparable to controls.

Overall Evaluation

The individual Section 8(e) and FYI submissions provide evidence that very low exposures to elemental phosphorus (0.075 mg/kg/day) can have a deleterious effect on dam survival just prior to and during parturition. The biological explanation for this serious adverse effect is not at all clear. Parturition is a very complex sequence of events, requiring accurate biological timing. From the summary information presented in Monsanto's Section 8(e) and FYI submissions, the observed parturition failure could be interpreted as being maternal or fetal in origin, and/or could represent maternal hormonal imbalance or other factors or fetal deficit, including death.

In order for EPA to attempt to evaluate the overall significance of the reported toxicologic findings, Monsanto should be asked to submit complete copies of the final reports from the reproduction studies cited in the company's Section 8(e) and FYI submissions. In addition, it would be of interest to know why this particular type of toxicologic study was conducted with elemental phosphorus.

CURRENT PRODUCTION AND USE

A review of the production range (includes importation volumes) statistics for phosphorus (CAS No. 7723-14-0), which is listed in the initial TSCA Inventory, showed that about 380 million to 1.76 billion pounds were reported as produced/imported in 1977. This production range information does not include any data claimed to be TSCA Confidential Business Information (CBI) by the person(s) who reported for the TSCA Inventory, nor does it include any data that would compromise TSCA CBI. All data reported for the initial TSCA Inventory, including the production range data, are subject to the limitations contained in the TSCA Inventory Reporting Regulations (40 CFR 710).

Monsanto did not provide any information on the use(s) of elemental phosphorus; secondary literature references revealed that elemental phosphorus is used in rodenticides, smoke screens and analytical chemistry (gas analysis).

COMMENTS/RECOMMENDATIONS

All members of the "Ad-Hoc Committee of Phosphorus Manufacturers" reportedly received a copy of Monsanto's Section 8(e) submission.

Following a preliminary review of FYI-OTS-0785-0423, it is EPA's initial position that the parturition-related maternal toxicity findings presented therein should have been submitted to the Agency under Section 8(e), the "substantial risk" information reporting provision of the Toxic Substances Control Act (TSCA). The basis for EPA's position in this matter is as follows:

> Section 8(e) states that "any person who manufactures, [imports,] processes or distributes in commerce a chemical substance or mixture and who obtains information which reasonably supports the conclusion that such substance or mixture presents a substantial risk of injury to health or the environment shall immediately inform the [EPA] Administrator of such information unless such person has actual knowledge that the Administrator has been adequately informed of such information."
>
> The preface to Part V of EPA's TSCA Section 8(e) policy statement explains that a "substantial risk of injury to health . . . is a risk of considerable concern because of (a) the seriousness of the effect . . . and (b) the fact or probability of its occurrence." With regard to the seriousness of the effect, Part V states that EPA considers the types of health effects for which substantial risk information must be reported to include "any pattern of effects or evidence that the [tested] chemical substance or mixture can produce . . . birth defects or toxic effects resulting in death, or serious or prolonged incapacitation [Part V(a)(2)]." The information regarding

these effects can be obtained directly or inferred from designed tests (e.g., studies in animals) as described in Part VI of the TSCA Section 8(e) policy statement. Part VI explains also that a "person is not to delay reporting until he obtains conclusive information that a substantial risk exists, but is to immediately report any evidence that reasonably supports that conclusion."

With regard to the "fact or probability of its [(i.e., the serious effect's)] occurrence" criterion, Part V of the Section 8(e) policy statement explains that certain types of adverse health effects (e.g., those described in Part V(a)(2) of the policy statement) are considered by EPA to be so serious that relatively little or no weight should be attached to the subject chemical's exposure in determining whether a risk is substantial. Further, EPA's response to Comment 31 in Appendix B of the Section 8(e) policy statement, as it pertains to a question on R&D chemicals, states that the occurrence of serious effects such as those described in Part V(a)(1) or (2) of the policy statement presuppose exposure to the tested chemical and must be reported immediately to EPA under Section 8(e).

Considering the preceding discussion, EPA believes that the serious parturition-related toxicity data contained in FYI-OTS-0785-0423 offer reasonable support for a conclusion of substantial risk and as such should have been submitted under Section 8(e) of TSCA.

a) The Existing Chemical Assessment Division will provide the Monsanto Company ample opportunity (20 working days) to rebut EPA's initial position on the TSCA Section 8(e)-applicability/reportability of the information contained in the company's FYI submission.

The Chemical Screening Branch will also ask Monsanto to ensure that EPA receives a full copy of the final report (including the actual experimental protocol, results of gross and histopathological examinations, results of any statistical analyses, etc.) from the one-generation rat reproduction studies cited in the company's TSCA Section 8(e) and FYI submissions. In addition, Monsanto will be asked to provide the specific rationale for the conduct of such studies on elemental phosphorus.

In view of EPA's general interest in company actions that are taken on a voluntary basis in response to chemical toxicity and/or exposure data, Monsanto will be requested to describe the actions that Monsanto and other members of the "Ad-Hoc Committee of Phosphorus Manufacturers" have taken or plan to take 1) to notify workers/others about the reported toxicological findings, and 2) to reduce or eliminate exposure to elemental phosphorus. Monsanto will be asked also to describe the nature and

results, if available, of all studies (other than those submitted already to EPA or those published in the open scientific literature) about which Monsanto and other "Ad-Hoc Committee" companies are aware or that Monsanto or those companies have conducted, are conducting, or plan to conduct that are designed to determine the toxicity of or the exposure to elemental phosphorus.

b) The Chemical Screening Branch will review the reported information in order to determine the need for further OTS assessment of elemental phosphorus.

c) The Chemical Screening Branch will send copies of this status report to NIOSH, OSHA, CPSC, FDA, NTP, OSWER/EPA, OW/EPA, ORD/EPA, OAR/EPA and OPP/OPTS/EPA; in addition, copies of this report will be sent to the Environmental Assistance Division/OTS (formerly the TSCA Assistance Office/OTS) for further distribution.

Members of the "Ad-Hoc Committee of Phosphorus Manufacturers

FMC Corporation
Monsanto Company
Hoechst AG Knapsack
Stauffer Chemical Company
Occidental Chemical Corporation
Albright & Wilson, Americas, Inc.

CODING FORM FOR SRC INDEXING **REVISED 10/15/86**

Microfiche No.		
OTS0518525-1		
New Doc I.D.	**Old Doc I.D.**	
89-900000079	8EHQ-0190-0820	
Date Produced	**Date Recieved**	**TSCA section**
1/01/90	1/11/90	8E
Submitting Organization		
MONSANTO CO		
Contractor		
BIO/DYNAMICS INC		
Document Title		
ONE-GENERATION REPRODUCTION STUDY IN RATS WITH ELEMENTAL PHOSPHORUS WITH ATTACHMENTS AND COVER LETTER DATED 010990		
Chemical Category		
ELEMENTAL PHOSPHORUS		

CONTAINS NO CBI

Monsanto

Monsanto Company
800 N. Lindbergh Boulevard
St. Louis, Missouri 63167
Phone: (314) 694-1000

January 9, 1990

Document Processing Center (TS-790)
(Attn: Section 8(e) Coordinator)
Office of Toxic Substances
U. S. Environment Protection Agency
401 M. Street, S. W.
Washington, D. C. 20460

8EHQ-0190-0820 FLWP
PDCN-88-8900000 65
89-900000079
316- Pages

Dear Sir:

This letter is in response to the Nov. 29, 1989 letter from Mr. Charles M. Auer requesting further information on the elemental phosphorus studies submitted by Monsanto (FYI - OTS - 0785-0423 and 8EHQ-0889-0820). The Agency has inquired as to Monsanto's rationale for conducting these studies. Human exposure to elemental phosphorus is carefully controlled because it is widely recognized as a highly toxic and pyrophoric substance. Therefore the first study was undertaken not because of widespread human exposure but because of a literature review which revealed reproductive toxicity in aquatic species at low phosphorus concentrations. We wanted to ascertain if these reproductive effects would also be present in mammalian species.

While the results of the first study were suggestive of toxicity in female rats at the time of delivery, there was some evidence that the results may have been complicated by a reaction between elemental phosphorus and corn oil. Thus the results may have been an artifact of the testing methodology and not indicative of risk to humans. In light of this potential complication and very low human exposure to elemental phosphorus, the results of this study were submitted for informational purposes to the Agency, to customers, and to other producers of this element.

Following the submission to the Agency a research program was undertaken to understand the possible interaction between elemental phosphorus and corn oil and to refine the analytical techniques. A two year research program by Monsanto scientists revealed that such interaction indeed occurs if extreme care is not taken to eliminate air during the preparation and handling of dosing solutions. This research effort led to the development of a testing protocol (Attachment 1) which required extremely meticulous care in all stages of sample preparation and analysis beyond the precautions already in the protocol for the first study. A second study on the reproductive effects of elemental phosphorus was undertaken by a consortium of elemental phosphorus producers, using the revised protocol. The results of the second study confirmed that the effects were related to administration of elemental phosphorus, and these preliminary results were submitted as an 8(e).

We are enclosing the final report from the first study (Attachment 2). The consortium has not yet received the final report for the second study. We will submit it to the Agency promptly after we obtain it from the testing laboratory. The report is anticipated in first quarter of 1990.

Mr. Auer's letter also requests information on actions taken to notify workers and others about the toxicological findings and actions taken to reduce exposure. Monsanto determined that the material safety data sheet (MSDS) would be an effective medium for communicating these toxicological findings. Therefore, shortly after receipt of the results from the first study, we incorporated the results into Monsanto's elemental phosphorus MSDS and broadly distributed the revised MSDS. A copy of this MSDS, dated 5/1/86, is enclosed (Attachment 3). Shortly after receipt of the preliminary toxicological results from the second study, Monsanto again modified its elemental phosphorus MSDS to provide additional warnings to female employees. A copy of the revised MSDS was sent to all Monsanto plants which produce or handle elemental phosphorus, to customers and to other producers of elemental phosphorus. The MSDS was enclosed with a letter which provided additional information about the study and which outlined Monsanto's exposure limitation practice. This practice is to exclude women of childbearing potential from workplace areas where airborne concentrations on an 8-hour time-weighted average may exceed 0.01mg/m^3. A copy of the letter and the MSDS dated 9/5/89 are also enclosed (Attachment 4).

We also conducted further industrial hygiene monitoring to assure ourselves that employee exposures did not exceed the above target. Personnel monitoring conducted with several employees at each of seven plants representing phosphorus producing and using facilities confirmed that exposures were less than the above target. Further exposure reductions do not appear to be necessary at this time.

As requested in Mr. Auer's letter, we are forwarding copies of EPA's status report to the other members of the industry consortium, along with a copy of Mr. Auer's letter and this response letter. The other companies are requested to respond directly to the Agency on the worker notification, exposure reduction and other studies submission requests in Mr. Auer's letter. No further studies are planned by the consortium.

Sincerely,

J. Ronald Condray
Director, Regulatory Management

cc: Dr. James T. Elfstrum
Stauffer Chemical Co.
Division of Rhone-Poulenc, Inc.
One Corporate Drive
Shelton, CT 06484
Dr. Myra Weiner

Mr. John C. Heussner
Tenneco Inc.
Tenneco Bldg.
1010 Miram
P. O. Box 2511
Houston, TX 77252-2511

Dr. Ladd W. Smith
Occidental Chemical Corp.
360 Rainbow Blvd. S.
Box 728
Niagara Falls, NY 14301

Dr. H. J. Ulrich
Hoechst AG Werk Knapsack
D5030
Hurth-Knapsack
West Germany

Dr. Myra Winer
FMC Corporation
P. O. Box 8
Princeton, NJ 08540

Dr. James P. Mieure
Monsanto Company
800 North Lindbergh Blvd.
St. Louis, MO 63167

CONTAINS NO CBI 4

ATTACHMENT 1

Bio/dynamics Inc.

Department of Toxicology

QUOTE NO.: 3833D

ONE-GENERATION REPRODUCTION STUDY IN RATS WITH ELEMENTAL PHOSPHORUS

Submitted to: Monsanto Company

Attention: Rashmi Nair, Ph.D., D.A.B.T.

Date: January, 1989

QUOTE NO.: 3833C

STUDY TITLE: One-Generation Reproduction Study in Rats with Elemental Phosphorus

The facilities of Bio/dynamics, Inc. and this study will be operated/conducted in accordance with the requirements and recommendations of the Animal Welfare Act (P.L. 89-544, as amended by P.L. 91-579 and P.L. 94-279), and other applicable federal, state and local laws, regulations and policies.

SPONSOR: Monsanto Company
800 N. Lindbergh Boulevard
St. Louis, Missouri 63167

ATTENTION: Rashmi Nair, Ph.D., D.A.B.T., Product Toxicology Manager

I. PURPOSE:

The objective of this study is to evaluate the effects of elemental phosphorus on the reproductive performance of the CD® rat through one generation. Test article will be administered by gastric intubation daily to male and female rats over an 80 day pre-mating period and throughout the mating period. Mated females will continue on treatment throughout the ensuing gestation and lactation periods through to weaning of the pups. F_0 adult generation animals will continue to be treated until sacrificed.

II. TESTING FACILITY:

This study will be conducted at Bio/dynamics, Inc. located on Mettlers Road (P.O. Box 2360) in East Millstone, New Jersey 08875-2360.

III. PROPOSED STUDY DATES:

Receipt of Test Animals:	*
Initiation of Treatment:	*
Initiation of Mating:	*
First Day 21 Lactation:	*
Sacrifice of F_0 Adults:	
Males:	*
Females:	*
Submission of Audited Draft Report:	*

IV. STUDY PERSONNEL:

Study Director:	Raymond E. Schroeder, M.S., D.A.B.T.
Project Supervisor:	Ellen Whiting, AALAS, L.A.T.

*to be determined

V. EXPERIMENTAL DESIGN:

Group	Test Article	Vehicle	Treatment Period[a]	Dose Level mg/kg/day	Dose Volume ml/kg/day	No. of Animals (F$_0$) Males	Females
I	None	Corn Oil	PM, M, G, L	0	5	15	30
II	Elemental Phosphorus	Corn Oil	PM, M, G, L	0.075	5	15	30
III	Elemental Phosphorus	Corn Oil	PM, M[b], G[b]	0.075	5	15	30
IV	None	Tricaprylin	PM, M, G, L	0	2	15	30
V	Elemental Phosphorus	Tricaprylin	PM, M, G, L	0.075	2	15	30

[a] Males will be treated daily through to sacrifice.

[b] Once mated (Day 0 of gestation) females will be treated through to Day 15 of gestation. Females will not be treated for the remainder of gestation or during lactation.

Key: PM = Premating treatment period
M = Mating period
G = Gestation
L = Lactation

VI. MATERIALS AND METHODS:

A. Test Article:	Elemental Phosphorus
Supplier:	Monsanto Company
NBP No's.:	3865209-210 (Ngo)
Description:	Colorless, waxy solid
Storage Conditions:	Stored under water in vials. The latter will be refrigerated in a solid metal container.
Expiration Date:	12/89
Hazards and Precautionary Procedures:	See Monsanto Toxicology Sample Submission Form and MSDS (also Appendix D).
B. Vehicles:	1, Corn oil (Mazola®)
	2, Tricaprylin (glycerol trioctanoate)
Source:	1, Commercially available
	2, Sigma Chemical Co., St. Louis, MO.
C. Test Animals (F_0):	
Species:	Rat
Strain:	Crl:CD® (SD) BR (outbred)
Supplier:	Charles River Breeding Laboratories Portage, Michigan
Justification of Species and Strain of the Test System:	Generally recognized standard laboratory rat. This strain of rat is commonly used in reproduction studies, and Bio/dynamics has historical control data concerning the reproductive performance of this strain.
Number of Animals:	Females - 180 ordered; 150 used on test. Males - 95 ordered; 75 used on test.

VI. MATERIALS AND METHODS:

C. Test Animals (F_0)-continued:

Age:	Males/Females - 6 weeks at receipt; 8-9 weeks at the initiation of treatment.
Equilibration Period:	At least 10 days.
Husbandry:	Currently-acceptable practices of good animal husbandry will be followed; e.g., Guide for the Care and Use of Laboratory Animals; DHHS Publication No. (NIH) 85-23, Revised 1985.
	Housing - individually, except: the first week of acclimation (2/sex/cage); during mating (2 females/male) and lactation (dam with the litter). Animals will be housed in suspended, stainless steel cages with wire mesh floors. On Day 20 of gestation, stainless steel floor pans will be inserted into the cages of mated females to retain the bedding material. These floor pans will be removed on Day 14 of lactation. Throughout the study absorbent cage papers will be placed beneath each section of cages on the animal rack to catch urine and feces. These absorbent rack papers will be changed at least three times weekly along with cleaning of the animal room.
	Food - Purina Certified Rodent Chow®, No. 5002 (mash form); ad libitum. Each cage will contain a glass feeder jar with a stainless steel lid. Fresh feeders and diet will be provided at least weekly.
	Water - via automated water delivery system (Elizabethtown Water Company); ad libitum.
	There are no known contaminants in the feed or water which are expected to be capable of interfering with the results of this study.

VI. MATERIALS AND METHODS:

C. Test Animals (F_o)-continued:

Husbandry-continued:	Bedding Material - Litter Kleen® hardwood shavings; provided for each mated female on Day 20 of gestation; fresh bedding will be provided as needed through to Day 14 of lactation.
Environmental Conditions:	Light/Dark Cycle - via automatic timer; 12 hour light/dark cycle (7 A.M. to 7 P.M.).
	Temperature - (72 ± 5°F); monitored twice daily (morning/afternoon).
	Humidity (30-70%) will be monitored once daily (morning).
	Temperature and humidity will be maintained within these ranges to the maximum extent possible.

D. Animal Identification:

All F_o adult generation animals will be identified with a metal ear tag. The animal's ear tag number plus the Bio/dynamics' Project Number will comprise a unique identification number for each animal.

E. Assignment of Animals to Groups:

After at least one week of acclimation, all animals received for this study will be given a detailed examination. The health status of the animal population will be evaluated at that time by the Staff Veterinarian, and unhealthy animals will be killed and discarded.

Prior to initiation of treatment (4-7 days), animals will be sorted into groups so as to equalize as best possible the mean body weights between test groups. A computerized sorting program will be used which sorts animals on the basis of their pre-sort body weight and temporary cage card number.

VI. MATERIALS AND METHODS-continued:

F. Administration of Test Article:

Route of Administration:	Gastric intubation
Justification for Route of Administration:	A previous reproduction study conducted by the oral route showed toxicity. Since this study is, in part, a repeat of this previous work, it is appropriate to use this same route of administration.
Preparation of Dosing Solutions:	A procedure for preparing the dosing solutions (Corn oil - Groups II and III and tricaprylin Group V) is presented in Appendix E. Bottle of dosing solution will be prepared for use on individual days (one bottle/dose group/day). Dosing solutions will be prepared at two week intervals at Bio/dynamics, Inc.

Stability:

Stability of the dosing solutions over the intended use interval will be conducted by Bio/dynamics, Inc. (see Appendix E.).

Accuracy of Preparation:

The analysis of dosing solutions for use in the study to confirm concentration levels of test article with the carrier will be conducted by Bio/dynamics, Inc. (see Appendix E).

G. Treatment Schedule:

F_0 males and females will be dosed daily for at least 80 days prior to mating. Dosing of the male animals (all groups - Groups I-V) will continue throughout the mating period until sacrifice. Females will be dosed daily during the mating period (Groups I-V) and mated females from Groups I, II, IV and V will continue to be treated during the ensuing gestation and lactation periods until sacrificed. Unmated females will continue to be dosed daily until sacrificed. In Group III females will be dosed during the mating period and once mated through to include Day 15 of gestation. These animals (Group III) will not be dosed for the remainder of the gestation period or during lactation.

VI. MATERIALS AND METHODS:

G. Treatment Schedule-continued:

A constant dose volume of 5ml/kg/day will be used for Groups I-III and 2 ml/kg/day for Groups IV and V. Individual animal dose volumes will be adjusted at each weighing interval during the study with the exception of Day 20 gestation. Females at Day 20 of gestation will be dosed in accords with their gestation Day 14 weights. All animals will be dosed at approximately the same time each day. Control animals (Groups I and IV) will be administered vehicle only (gastric intubation) at a comparable dose volume as treated animals (V Experimental Design, page 3).

Dosing solutions will be provided by Bio/dynamics (Department of Metabolism and Analytical Chemistry) in rubber capped glass bottles. The following procedure will be used for drawing out dosing solutions.

1. The plastic syringe will be filled with Nitrogen gas (N_2) to a volume equivalent to the volume of liquid to be drawn out. (Volume to be dosed plus excess to account for volume in the intubation needle).

2. The syringe at this time will be fitted with a 3-4 inch blunted 18 gauge intubation needle.

3. The needle will be inserted thru the rubber cap, the volume of gas in the syringe expelled into the container and the appropriate volume of dosing solution drawn out.

4. The dose will be delivered (gastric intubation) to the animal.

5. The plunger on the syringe will be removed and the syringe flushed with N_2 and the plunger placed back in the syringe and the volume set for the next dose volume plus a little extra to compensate for displacement in the intubation needle.

6. All syringes will be filled with dosing solutions in a N_2 blanketed air bag.

H. Mating:

One male will be co-housed nightly with the same two females from the same treatment level until a female shows evidence of mating or for 10 consecutive days. Following this interval, all unmated females will be randomly distributed among the sexually active males (males mating during the first 10-day period) in their respective groups for a second period involving 5 nightly intervals of co-housing. Thus, the mating period will be a total of 15 days.

VI. MATERIALS AND METHODS:

H. Mating-continued:

Each morning following intervals of co-housing, females will be evaluated for evidence of mating (copulatory plug in the vagina and/or sperm in the vaginal smear). The day evidence of mating is observed will be considered Day 0 of gestation and mated females will be removed from the mating unit and housed individually for the remainder of gestation.

I. Parturition and Lactation:

On Day 20 of gestation, each mated female's cage will be fitted with a stainless steel floor pan and bedding material will be provided. Thereafter, examination of individual females for signs of parturition will be made 24 times daily at hourly intervals. The date and time that parturition initiates will be identified as will the time and date that parturition is considered completed. These data will be noted on the individual female litter examination sheets. Formal litter examinations will be conducted twice daily (morning 8:00-10:30 A.M. and afternoon 3:00-5:00 P.M.). The day on which all pups have been delivered within an individual litter will be designated Day 0 of lactation for that female.

Litters will be housed with their respective dams throughout the lactation period.

Optional Second (F_{1b}) Litter:

The decision to re-mate males and females to produce a second (F_{1b}) litter will be determined by the sponsor after reviewing reproductive data for the F_{1a} litters.

VII. EXPERIMENTAL EVALUATION (IN-LIFE):

A. General Observations:

F_o Females:

During late gestation and parturition intervals animals will be observed for mortality/morbidity hourly over the 24 hour interval. During other intervals of the study, viability checks will be made at least twice daily (morning, afternoon). Animals found dead during intervals after 5:00 p.m. and before 8:30 a.m. will be refrigerated until necropsy can be performed. Observations of pharmacologic and/or toxicologic effects will be made twice daily along with the daily viability checks. A detailed physical in-life evaluation will be performed weekly for each adult generation animal.

VII. EXPERIMENTAL EVALUATION (IN-LIFE)-continued:

B. Body Weight Determinations:

Body weights for the F_0 adult males and females will be recorded at initiation of treatment (first day of dosing) and weekly thereafter during the pre-mating period. Males will continue to be weighed weekly during the mating and post-mating intervals. Females that mate will be weighed on Days 0, 7, 14 and 20 of gestation, and females that deliver will be weighed on Days 0, 4, 14 and 21 of lactation. Unmated females will be weighed weekly until termination.

C. Food Consumption:

Food consumption will be recorded for the pre-study (post-sorting) interval (designated baseline period) and weekly for the pre-mating treatment period. Food consumption will be recorded for mated females over the Day 0-7, 7-14 and 14-20 gestation interval. Food consumption will not be recorded in the following instances: males during the mating period; females during the mating and lactation intervals; or females during the post-weaning period till sacrifice. Food consumption will be recorded weekly for males during the post-mating period until sacrificed.

D. Litter Evaluations:

Litters will be observed as soon as possible after delivery during the specified morning or afternoon intervals (Sec. I. Parturition and Lactation; Page 9) for the number of live, dead and total pups at birth. Thereafter, litters will be observed twice daily (morning; afternoon) for the presence of dead pups. The latter will be removed from the litter immediately when found. The occurrence of dead pups during lactation will be recorded on the individual female's litter examination sheet.

Pups will be counted in each litter on Days 0, 4, 7, 14 and 21 of lactation. On Day 4 of lactation, each litter with greater than eight pups will be culled to that number with sex distribution equalized (4/sex) when possible.

Each pup will be given a gross physical examination on Days 0, 4, 14 and 21.

Pups will be weighed individually and sexed (external sexing criteria) on Days 0, 4, 7, 14 and 21.

VIII. POSTMORTEM:

A. F_0 Females:

1. Females that retain litters to Day 21 of lactation will be sacrificed after the last litter on study is weaned (sponsor decision). All these females will be given a gross postmortem evaluation and uterine implantation scars will be counted. Abnormal tissues will be noted and tissues saved as per Section C, Page 12.

2. Females that experience complete litter mortality will be sacrificed after the last litter on study is weaned (sponsor decision). These females will be given a gross postmortem evaluation and uterine implantation scars counted. Abnormal tissues will be noted and tissues saved as per Section C, Page 12.

3. Mated females that do not deliver a litter will be killed as a group with those females that have weaned litters (sponsor decision). Females will be given a gross postmortem evaluation with particular attention given to the uterus for the presence of implantation sites or scars. Tissues will be saved as per Section C, Page 12.

4. Females that do not mate will be sacrificed as a group with females that have weaned litters (sponsor decision). These females will be given a gross postmortem examination with particular attention given to the uterus for implantation sites or scars. Abnormal tissues will be noted and tissues saved as per Section C, Page 12.

5. Females that die during the study or are killed in a moribund condition will be given a gross postmortem evaluation. Abnormal tissues will be noted and tissues saved as per Section C, Page 12.

B. F_0 Males:

Males will be sacrificed after the last F_{1a} litters have been weaned (sponsor decision). This will provide an opportunity to evaluate the fertility of these males prior to sacrifice. Such animals may be retained to produce a second (F_{1b}) litter (sponsor decision - additional cost item).

VIII. POSTMORTEM-continued:

C. Tissues Saved and Weighed:

The following tissues will be saved for all F_o adult generation animals (scheduled sacrifice, moribund sacrifice or spontaneous death):

Males	Females
liver	liver
kidneys	kidneys
bone (right femur)	bone (right femur)
heart	heart
testes*	ovaries
epididymides*	uterus
prostate	vagina
seminal vesicles	pituitary
pituitary	gross lesions
gross lesions	

*Testes and epididymides will be fixed in Bouin's Solution prior to permanent storage in 10% neutral buffered formalin.

Organs identified with an * above will be weighed at necropsy.

D. F_1 Pups:

These pups will be sacrificed on Day 21 of lactation and given a gross external and internal examination. Only abnormal tissues will be saved.

E. Dead Pups:

Dead pups recovered during lactation will be given an external and internal examination, sexed (internal inspection of the gonads) and preserved in 10% neutral buffered formalin.

F. Culled Pups (Day 4):

Sexed by internal inspection of the gonads and discarded.

G. Method of Sacrifice (F_o Adults and F_1 Pups):

Overdose of ether inhalation.

H. Preservation of Tissues:

10% neutral buffered formalin.

IX. STATISTICAL EVALUATIONS:

Data for test Group II and III will be compared to data for control Group I and data for test Group V will be compared to data for control Group IV.

Parameters Evaluated	Statistical Procedure
Mortality Data	Incidence Data[a]
Weekly Body Weights - Males and Females Pre-Mating Period	Interval Data[b]
Weekly Food Consumption - Males and Females Pre-Mating Period	Interval Data
Mean Weight Gain (Entire Pre-Mating Period) - Males and Females	Interval Data
Weekly Body Weight and Food Consumption - Males - Post-Mating Period	Interval Data
Mating, Pregnancy, Fertility Indices	Incidence Data
Gestation Body Weights and Food Consumption	Interval Data
Parturition Data (Gestation Length, Number of Live, Dead and Total Pups at Birth)	Interval Data
Mean Litter Size at Days 4 (Pre- and Post-Cull), 14 and 21:	Interval Data
Mean Pup Weight (Litter Experimental Unit):	Interval Data
Pup Survival Indices (Days 0-4, 4-21):	Incidence Data
Litter Survival Index:	Incidence Data
Organ weight data - absolute and relative to terminal body weights (TBW)	Interval Data

[a] Incidence Data - Appendix A [A-1 multiple groups (Groups I-III) and A-2 two group (Groups IV-V) comparisons]

[b] Interval Data - Appendix B [B-1 multiple groups (Groups I-III) and B-2 two group comparison (Groups IV-V]

X. REPORT:

A final report will be prepared and will include the following (prior to submitting the final report, one copy of an audited draft report will be sent to the sponsor):

Abstract
Introduction
Materials and Methods
Experimental Design
Results and Discussion

X. REPORT-continued:

The following data will be summarized:

Mortality
Mean body weight data; pre-mating treatment period and mean weight gain for the entire interval
Mean body weight data (males); post-mating interval (weekly)
Mean maternal body weight data; gestation/lactation interval
Mean food consumption; each recorded interval
Mating, pregnancy and fertility indices
Summary statement for physical in-life evaluation data and gross postmortem observations
F_1 litter data; gestation length, litter size, dead pups at birth, missing pups during lactation
Mean pup weight and sex distribution ratios; each recorded interval
Pup survival indices
Organ weight data (F_0 adults) - absolute and relative to TBW

Appended data will include but not be limited to:

Animal termination history
Individual body weight data; all recorded intervals
Individual food consumption data; all recorded intervals
Individual female F_1 litter data to include: gestation length, number of live, dead and total pups at birth and litter size on Days 0, 4, 14 and 21; mean pup weight (each recorded interval) and number of male/female pups each recorded interval
Individual and summarized physical in-life observation data
Individual gross postmortem observation data (Pathology Report) - F_0 adults/F_1 pups
Individual organ weight data - absolute and relative to TBW
Quality Assurance Statement
Personnel Involved in the study
Copy of Protocol

XI. QUALITY ASSURANCE STATEMENT:

This study will be subject to the quality assurance auditing procedures as set forth by the Quality Assurance Unit of Bio/dynamics Inc. This study is designed to conform to the EPA (TSCA) GLP regulations as set forth in 40 CFR, Part 792.

XII. ALTERATION OF DESIGN:

Alterations of this protocol may be made as the study progresses. No changes in the protocol will be made without the specific written request or consent of the sponsor. In the event that the sponsor authorizes a protocol change verbally, such change will be honored by Bio/dynamics which will follow such verbal change with a written verification. All protocol modifications will be signed by the Study Director.

XIII. PRESERVATION OF TEST RECORDS AND SPECIMENS:

At the completion of the study, all reports, raw data, preserved specimens and retained samples will be maintained without charge in the Bio/dynamics Inc. Archives for a period of at least one year after submission of the final report. The sponsor will be notified annually thereafter regarding additional cost for sample space needed to retain raw data/samples beyond one year.

The unused portion of the test material will be returned to the sponsor following completion of the study.

PROTOCOL REVIEWED AND ACCEPTED:

BY: _____ DATE: 1/5/89
Raymond E. Schroeder, M.S., D.A.B.T.
TITLE: Study Director
FOR: Bio/dynamics, Inc.

BY: _____ DATE: _____
Rashmi Nair, Ph.D., D.A.B.T.
TITLE: Product Toxicology Manager
FOR: Monsanto Company

I have reviewed the protocol of the above study and have found that the study design will minimize pain or distress by the test animals within the objectives of the study. If anesthetic, analgesic, or tranquilizer drugs can be used, they are the proper type for the given species. If euthanasia is to be performed, the method is proper for the given species.

BY: _____ DATE: 1/11/89
Edward T. Greenstein, D.V.M., DACLAM
TITLE: Director of Laboratory Animal Medicine
FOR: Bio/dynamics, Inc.

APPENDIX A

STATISTICAL PROGRAM - MULTIPLE/TWO GROUP STUDIES (INCIDENCE)

Statistical analysis of incidence data will be performed using contingency table techniques, comparing each treated group with the control group. For each such comparison, a 2x2 table will be formed from the numbers of animals with and without the event of interest in both the control and treated group. The table will be evaluated by the Fisher's Exact test. Tests will be conducted at the 1% two-sided risk level.

Reference for this procedure is Bradley, J.V., Distribution Free Statistical Tests, Prentice-Hall, Englewood Cliffs, N.J., 1968, pp. 195-203.

30

APPENDIX A

MULTIPLE GROUP STUDIES (INCIDENCE)

Statistical analysis of incidence data will be performed using contingency tables. First a standard chi-square analysis will be performed to determine if the proportion of incidences differ between the groups tested. In keeping with standard statistical practice, if any one cell has an expected value less than 5, this step will not be reported. Next, each treatment group will be compared to the control group using a 2x2 Fisher Exact test, the significance level will be corrected via the Bonferroni inequality to assure an overall test of the stated significance level. Thirdly, Armitage's test for linear trend in the dosage groups will be performed.

All tests will be reported at the 5% and 1% level of significance.

References for the techniques are:

Chi-square:	Snedecor, G.W., and Cochran, W.G., Statistical Methods, 6th ed., Iowa State University Press, Ames, Iowa, 1971, pp. 250-253.
Fisher Exact Test:	Bradley, J.V. Distribution Free Statistical Tests, Prentice-Hall, Englewood Cliffs, N.J., 1968, pp. 195-203.
Bonferroni Inequality:	Miller, R.G., Jr., Simultaneous Statistical Inference, McGraw-Hill Book Company, N.J., 1966, pp. 15.
Armitage's Test:	Armitage, P., "Tests for Linear Trends in Proportions and Frequencies", Biometrics, Sept. 1955, pp. 375-386.

[illegible] evaluation [illegible] be made by the appropriate one way analysis of variance technique, followed by a multiple comparison procedure. Dunnett's test will be performed to determine if groups have equal [illegible] If the variances are equal, parametric procedures will be used; [illegible], nonparametric procedures will be used. The [illegible] parametric analysis will be a standard one way ANOVA using the F distribution to assess significance. If significant differences among the means are indicated, Dunnett's test will be used to determine which means are significantly different from the control. If a nonparametric procedure for [illegible] will be used, [illegible] will be used to determine which treatments differ from control.

[illegible] test for trend in the dose levels will also be performed. In the parametric case (i.e., equal variance), standard regression techniques [illegible] a test for trend and lack of fit will be used. In the nonparametric [illegible] for monotonic trend will be used.

The test for equal variance (Bartlett's) will be conducted at the 1% two-sided risk level. All other statistical tests will be conducted at the 5% and 1%, two-sided risk levels.

References for these techniques are Snedecor, G.W. and Cochran, W.G., Statistical Methods, 6th edition, Iowa State University Press (1967), Hollander and Wolfe, Nonparametric Statistical Methods, John Wiley and Sons, New York (1973), Dunnett, C.W., J. Am. Sta. Assn. 50: 1096-1121 (1955) and Biometrics 20: 482-491 (1964).

Bartlett's Test	pp. 296-298	S&C
ANOVA	pp. 277-279	S&C
Dunnett's Procedure	pp. 1096-1121.	D
	pp. 482-491	Dun
Kruskal-Wallis	pp. 115-116	H&W
[illegible]	[illegible]	[illegible]
Regression	pp. 143-[illegible]	[illegible]
[illegible]	pp. [illegible]	S&C
Jonckheere's Statistic	pp. 120-122	H&W

APPENDIX B

BIO STAT MULTIPLE GROUP DATA (ABSOLUTE)

Statistical evaluation of equality of means will be made by the appropriate one way analysis of variance technique, followed by a multiple comparison procedure if needed. First Bartlett's test will be performed to determine if groups have equal variance. If the variances are equal, parametric procedures will be used; if not, nonparametric procedures will be used. The parametric procedures will be the standard one way ANOVA using the F distribution to assess significance. If significant differences among the means are indicated, Dunnett's test will be used to determine which means are significantly different from the control. If a nonparametric procedure for testing equality of means is needed, the Kruskal-Wallis test will be used, and if differences are indicated, a summed rank test (Dunn) will be used to determine which treatments differ from control.

A statistical test for trend in the dose levels will also be performed. In the parametric case (i.e., equal variance), standard regression techniques with a test for trend and lack of fit will be used. In the nonparametric case, Jonckheere's test for monotonic trend will be used.

The test for equal variance (Bartlett's) will be conducted at the 1% two-sided risk level. All other statistical tests will be conducted at the 5% and 1%, two-sided risk levels.

References for these techniques are Snedecor, G.W. and Cochran, W.G., Statistical Methods, 6th edition, Iowa State University Press (1967), Hollander and Wolfe, Nonparametric Statistical Methods, John Wiley and Sons, New York (1973), Dunnett, C.W., J. Am. Sta. Assn. 50: 1096-1121 (1955) and Biometrics 20: 482, (1964).

Bartlett's Test	pp. 296-298	S&C
ANOVA	pp. 277-279	S&C
Dunnett's Test	pp. 1096-1121,	D
	pp. 482-491	Bio
Kruskal-Wallis	pp. 114-116	H&W
Summed Rank Test (Dunn)	pp. 131	H&W
Regression Analysis - Trend	pp. 149-152	S&C
Lack of Fit	pp. 456-459	S&C
Jonckheere's Statistic	pp. 120-123	H&W

23

APPENDIX B

Two-Group F-test

The variances of the two groups will be tested for equality using the F-test. If the variances are equal, a standard independent two sample t-test will be used to determine equality of means. If the variances differ at the 1% level of significance, Welch's t-test will be used to determine equality of means. T-tests will be conducted at the 5% and 1%, two-sided risk level.

References for these techniques are:

F-test:	Gill, J.L., Design and Analysis of Experiments in the Animal and Medical Sciences. Iowa State University Press, Ames, Iowa (1978). Vol. I, pp. 63-65.
t-test:	Ibid., pp. 67-78.
Welch's t-test:	Ibid., pp. 71.

PREPARATION AND ANALYSES OF DOSING SOLUTIONS

1. METHOD VALIDATION:

Preparation method supplied by the Sponsor will be validated at our laboratory for both corn oil and tricaprylin. Control vehicle will be fortified with test material and will be evaluated for reproducibility of results by the supplied method. Mean and standard deviations will be computed on multiple extractions and injections of the concentration level to be used for the study.

2. STABILITY ANALYSES:

Stability of the test material in corn oil, iso-octane and tricaprylin will be determined on Days 0, 1, 7, 14 and 21. If the data indicates the test material is unstable in solution at room temperature, stored under nitrogen, stability will be re-evaluated.

3. PREPARATION AND ANALYSES OF DOSE SOLUTIONS:

Preparation and analyses of the dose solutions will be performed bi-weekly. Analyses will be performed on each sample prepared to determine that the concentration is within $\pm$ 10% of the nominal concentration prior to dosing. Those not within the acceptable range will be discarded and new solutions will be prepared. Dose solutions will be divided into 21 vials for dosing using the last 7 vials only in the event of the fresh dose solution falling outside the acceptable range. An additional analysis will be performed to determine if the dosing solution degrades during the actual dosing. This will be done by preparing a dose solution and obtaining its concentration. After the concentration is known the solution will be transferred to a dosing vial and mock dosing of twenty doses will be performed. The dosing vial will then be re-analyzed to determine the concentration.

PREPARATION AND ANALYSES OF DOSING SOLUTIONS - continued

4. DISPOSAL OF SOLUTIONS:

All solutions containing more than 40 ug/ml of phosphorus will be disposed of according to the method supplied by the Sponsor.

PREPARATION OF ELEMENTAL PHOSPHORUS DOSING SOLUTIONS

Written by: T.M. Ngo
M.L. Trehy
Monsanto Company

Revised by: Mark Edfort
Bio/dynamics, Inc.

The attached method was formulated by Monsanto Company for the preparation of elemental phoshorus in tricaprylin. This method was followed for the preparation of elemental phosphorus in tricaprylin and corn oil. Ammendmants to procedure are included on page 14.

Preparation of Elemental Phosphorus Solutions in Tricaprylin

T. M. Ngo and M. L. Trehy

October , 1988

Warning: Elemental white (yellow) phosphorus is spontaneously combustible and toxic. Isooctane and Methanol are flammable.

Note: One carbon dioxide fire extinguisher is required at all times. In addition, one safety shower nearby is required. This operation is not to be performed alone, requires at least one person nearby in case of accident, and also requires two people during steps which require weighing to cross-check and record the weight precisely.

White (yellow) phosphorus is very sensitive to oxygen from the air, to u.v light, and is flammable. Tricaprylin is a very expensive material. Therefore, extreme care and precaution should be taken during the preparation of dosing solutions and analytical solutions. Study the material safety data sheet (MSDS) thoroughly and follow the procedure given below in detail in order to avoid injury and loss of experimental work.

I. Equipment needed:

1. One drying oven at 140 degrees centigrade.

2. House N_2 or N_2 cylinder (< 5 ppm oxygen) equipped with an oxygen scrubber unit available from American Scientific Products (Baxter), Part #G5301-1. The N_2 cylinder purchased should have a minimum purity of 99.9% with an oxygen content of less than 5 ppm.

3. One variable transformer connected to a heating mantle that fits the 3 liter - 3 neck round bottom flask.

4. One glass thermometer with temperature range of -10 to 110 degrees centigrade.

5. A thermometer adaptor that fits the 24/40 side neck.

6. A nitrogen glove box, model XPL855AC from Baxter with accessories from Fisher (see attached memo).

7. One glass adaptor that has an open or close valve that fits 24/40 side neck flask (Pyrex brand glass connecting tube with stop cock and 90^0 angle connection, Fisher 88 - cat #15-324E).

8. An analytical balance with digital display that can weigh to 0.1 mg. (Mettler A-100 obtained through Fisher).

9. A stirring plate that has a base of at least 8" X 6".

10. Two 3 liter pyrex flasks with three vertical necks (side neck: 24/40; center neck: 34/45).

11. 3 liters of 99% tricaprylin, Sigma T-9001, lot # 38F-8371.

12. Approximately 550 ml. G.C grade isooctane.

13. Approximately 120 ml. G.C grade methanol.

14. Two magnetic stirring bars (1 1/2" L X 5/16" D).

15. Four magnetic stirring bars (1" L X 5/16" D).

16. One 1 liter filtering flask.

17. One 500 ml filtering flask.

18. Six 30 ml beakers.

19. Two 100 ml beakers.

20. One vial of purified elemental phosphorus weighing between 0.1 to 0.2 grams as supplied by Monsanto.

21. Two Braun jeweler, curved forceps (length 4 1/2" obtained from Fisher 88-cat. # 08-953F).

22. A box of Shur-Wipe Wipers paper tissue, size 15" X 16 1/2", or equivalent Kleenex paper tissue.

23. A box of aluminum foil wrap - 12" X 100'.

24. One 250 ml volumetric flask with teflon cap.

25. Ten 50 ml volumetric flasks with teflon caps.

26. Fifteen of 1/8" X 1/2" Fisher brand magnetic stirring bars, cat. # 14-511-60.

27. Two each of No. 6, 7, 8, and 9 rubber stoppers.

28. Five Pasteur pipette bulbs (2 ml. size).

29. Twenty each of 15 cm and 23 cm long disposable glass Pasteur pipettes.

30. A case of 1 ml serum bottles, Borosilicate glass (Fisher cat. # 06-406AA or Varian 1 ml autosampler vials).

31. A case of one-piece aluminum seals (Fisher 88-cat. #06-406-13A).

32. One manual crimper (Fisher cat. #06-406-20).

33. 20 ft of Tygon tubing for connections such as between vacuum line, N_2 line, glass tubing, etc..

34. A glass marker pen to label bottles, vials, etc., and a scissors for cutting tubing.

35. Several 500 ml glass disposal bottles with caps that have plastic liners to contain waste solution. 29

36. Twenty-five of 100 ml serum bottles with one piece aluminum seals and a manual crimper.

37. Four screw-clamps (Fisher hose clamp, Part #5-847).

38. One ring-stand and ring-stand clamp to support flasks.

II. Safety:

30

Solid elemental phosphorus ignites spontaneously on exposure to air and burns to produce copious white smoke of P_2O_5 or hydrated P_2O_5. (H_3PO_4). If wet, the burning phosphorus tends to splatter viciously. Long sleeve rubber gloves, a rubber apron and a face shield are required to prevent burns from a splatter when handling P_4.

Phosphorus is highly toxic. 100 mg is generally fatal, 15 mg is severely toxic upon ingestion.

P_4 vapor in air is toxic, the OSHA standard is 100 ug/m^3

P_4 is reputed to be absorbed through skin.

III. Comment on safety:

1. Solid elemental white phosphorus can be exposed to room temperature air for periods of up to about 20 seconds and ignition may not occur. However, the time can vary appreciably depending on temperature, the size and shape, the adherence of a water film, etc. It is recommended that white phosphorus not be exposed to air even for short periods.

2. Phosphorus fires can be extinguished readily with water, inert material (such as sand) or by excluding oxygen with a cover, and also by a carbon dioxide fire extinguisher. Reignition will be rapid unless the material is kept wet or covered. Burning phosphorus may extinguish itself with a coating of phosphoric acid, leaving unburned residue. The smoke from burning phosphorus (P_2O_5 or H_3PO_4) is irritating, but not particularly toxic. Combustion in a closed area or with a deficiency of oxygen could conceivably produce toxic concentrations of P_4 vapors.

Important: In the event of a major spill in the nitrogen glove box

* Methanol and isooctane are flammable!

* Phosphorus is spontaneously flammable in air!

In the event of a methanol or isooctane spill of more than a 4 ml quantity in the nitrogen glove box, STOP all operations. Make sure all phosphorus is in a closed bottle; if not, return it to a closed bottle. Use tissue to wipe up any spilled methanol or isooctane, and pour any methanol or isooctane into the waste bottle. Flush the glove box for at least one hour with N_2 at the rate of 6 ft^3/hr. Remove all tissue from the box through the interlock system and dispose of it in a metal bucket where it may be burned. Note: Interlock purged by alternating application of vacuum and then addition of nitrogen to atmospheric pressure 3 times.

In the event any elemental phosphorus is lost in the nitrogen glove box, STOP all operations. Pour all open methanol or isooctane into the waste bottles. Return all phosphorus to a closed container. Continuously flush the box with nitrogen at the rate of 5ft^3/hr. Remove all items which are burnable or flammable from the box through a prepurged N_2

interlock system. Be certain that any flammable items are placed in a metal bucket where they may be burned safely in the event of spontaneous combustion. Observe the interior of the box thoroughly for at least ten minutes to be certain no particle of elemental phosphorus is left in the box. If not able to locate the phosphorus, open the box entirely and clean it thoroughly before restarting the operation again.

IV. Preparation of Solutions:

The preparation of dosing solutions for toxicity studies of purified elemental white phosphorus at a concentration of 0.0375 mg/ml in tricaprylin and of purified phosphorus in isooctane for stability study by G.C requires extreme care and attention to the following critical steps:

* All glasswares or lab-wares must be carefully cleaned and preheated at least at 140 degrees centigrade for one hour and immediately transferred to the nitrogen glove box.

* Purge the nitrogen glove box with nitrogen gas that has been scrubbed with an oxygen or air remover unit (American Scientific Products Part #G5031-1) at a rate of 2.0 to 2.5 ft^3/hr with a minimum of 15 volumes of N_2 and a minimum of 24 hours prior to preparing solutions. Make sure there is a positive nitrogen pressure at all times. **NOTE: Make sure all empty bottles, flasks, boxes, cans, etc are opened during N_2 purge.**

* Check to make sure there is no leak due to a poor seal between the bottom half and top half of the box by using a leak detector solution.

* Cover the bottom of the nitrogen box totally with Kimwipe to absorb a minor spill or keep the total system clean to avoid contamination.

* Provide a metal can to contain waste tissues and pipettes.

* Provide four 500 ml bottles with plastic caps to contain waste solutions. Make certain that these containers are purged with N_2 while in the N_2 glove box.

* Four extra large Kimwipe sheets, and 12" x 3' aluminum foil.

* Make sure the solutions that contain phosphorus are covered with aluminum foil to prevent white phosphorus exposure to light which converts to red P_4.

B7

2. Preparation of dosing and analytical solutions: All steps below follow in sequence and must be done in N_2 glove box. Label everything immediately to prevent mix-up.

   1. Place all of preheated (1 hour at 140°C) glasswares, labwares, and equipments necessary for the experimental work into a nitrogen glove box.

   2. Purge the box with nitrogen gas that has been scrubbed with a proper oxygen or air remover unit at a rate of 2.0 to 2.5 ft^3/hr with a minimum of 15 volumes of N_2 and for a minimum of 24 hours. Once purged, maintain continous N_2 flow.

   3. Pour approximately 2200.0 ml of tricaprylin (Sigma T-9001, 38F-8371) into a 3 liter - 3 neck - round bottom flask and place a stirring bar (1 1/2" L x 5/16" D) into the flask.

   4. Check the the nitrogen flow rate into the nitrogen glove box to assure a flow rate of 2.0 or 2.5 ft^3/hr and start deaerating tricaprylin at 60 degrees centigrade for at least twelve hours after reaching 60° C as shown in Figure I. Carefully set a mild nitrogen flow through the tricaprylin as a result of positive pressure of nitrogen from the box and control the flow of nitrogen by a hose clamp while pulling a vacuum on the erlenmeyer flask. The temperature of tricaprylin is monitored by a thermometer and controlled by a variable transformer or with a thermowatch.

   5. Deaerate approximately 500.0 ml G.C grade isooctane at room temperature for at least 30 minutes as shown in Figure II. NOTE: A mild amount of nitrogen bubbles inside the flask is controlled similarly to step 4.

   6. Deaerate approximately 100.0 ml G.C grade methanol at room temperature for 10 minutes as shown in Figure III. NOTE: A mild amount of nitrogen bubbles inside the flask is controlled similarly to step 4.

   7. Set up empty 3 liter 3 neck round bottom flask similar to step 4.

   8. Pour a precut chunk of purified elemental phosphorus (weighing approximately between 0.10 to 0.2g) contained in a small vial of deaerated deionized water into a 30 ml beaker and use a sharp-edged 3-inch wooden spatula to cut the chunk of phosphorus in half.

   9. Pour approximately 15 ml of deaerated G.C grade methanol prepared in step 6 to a 30 ml beaker.

11. Zero the digital Mettler balance, Model AE-100.

12. Transfer the chunk of phosphorus in step 10 by means of a curved microforceps onto a clean Shur-Wipe or Kleenex paper tissue to dry off methanol by rolling the chunk several times. Transfer the chunk to a prepared balance and obtain its weight. Immediately transfer it to the 3 liter flask in step 7.

13. Volumetrically transfer the proper amount of deaerated tricaprylin prepared in step 3 into 3 liter - 3 neck round bottom flask containing P_4 by means of a 500 and 100 ml graduate cylinder.

NOTE: Make sure the deaerated tricaprylin is no longer dripping from the graduate cylinder during the transfer to the flask. The X-amount of deaerated tricaprylin required in order to obtain a concentration of 0.0375 mg P_4/ml tricaprylin can be calculated as follows:

$$\text{X-ml of tricaprylin} = \frac{\text{weight of } P_4 \text{ in mg}}{0.0375 \text{ mg/ml}}$$

14. Dissolve P_4 in deaerated tricaprylin at 60 degrees centigrade for 2 1/2 hours as shown in figure IV. **NOTE:** Make sure the phosphorus is totally dissolved by visual observation for at least 5 minutes. Also cover the flask with aluminum foil during the dissolving step. Transfer the prepared solution to many 100 ml serum bottles with one piece, aluminum seal caps.

15. Transfer a weighed chunk of phosphorus (similar to the step of preparing P_4 in tricaprylin) to a clean 250 ml volume and pour deaerated G.C grade isooctane to the mark by means of a glass 65 mm mouth funnel. Carefully place a 1" L x 5/16" D magnetic stirring bar to the flask and cap the flask with a teflon cap. Wrap the flask with aluminum foil while waiting for P_4 in tricaprylin to dissolve in step 14.

16. Stir P_4 in isooctane for 1 1/2 hours at room temperature to dissolve P_4 and make sure P_4 is totally dissolved by visual observation for at least 5 minutes. **NOTE:** The phosphorus should be completely dissolved within this period if the concentration is less than 350 ppm. The solution prepared in step 16 is considered a stock solution.

34

17. Transfer proper amounts of solutions prepared in step 14, P_4 in tricaprylin, and weigh them. The weighings are done each into three separate preweighed 50 ml volume flasks in such a way that the concentration of P_4, after diluting to the mark with deaerated isooctane (prepared in step 5), fall into a 0.3 to 1.0 mg P_4/liter solution. Carefully place a 1/8" x 1/2" magnetic stirring bar into each of the flasks and cap the flasks with teflon caps. Stir these solutions for at least 10 minutes. **NOTE:** One also prepares another 50 ml solution similar to the step 17 with the exception of diluting with deaerated tricaprylin. These four solutions are used for stability study by G.C analysis. The concentration of P_4 with respect to the total solution is calculated as follows:

Concentration of P_4 after dilution (or P_4 with respect to total solution)ug/ml

$$\frac{\text{Grams of solution in step 17}}{\text{Density (Trycaprylin or Isooctane) in g/ml}} \times \frac{\text{(Concentration of } P_4 \text{ solution in step 17)ug/ml}}{\text{50 ml.}}$$

where density of trycaprylin is equal to 0.950 g/ml and
where density of icooctane is equal to 0.692 g/ml.

18. Transfer an appropriate amount of stock solutions prepared in step 16, P_4 in isooctane, each into one of three separate preweighed 50 ml volumetric flasks, and weigh them. The weighings of stock solution are done in such a way that the concentration of P_4, after being diluted to the mark with deaerated isooctane prepared in step 5, fall into 0.3 to 1.0 mg of P_4/liter solution or ug/ml. Carefully place a 1/8" X 1/2" magnetic stirring bar into each of the flasks and cap the flasks with a teflon cap. Stir these solutions for at least 10 minutes. **NOTE:** One also prepares another solution similar to step 18 with the exception of diluting with deaerated tricaprylin. These first three solutions are used to establish a standard calibration curve by G.C and the fourth one is used to cross-check stability of P_4 solution in step 17. The concentration of P_4, with respect to the total solution is calculated as follows:

Concentration of P_4 after dilution (or P_4 with respect to total solution)ug/ml

=

$$\frac{\text{Grams of solution in step 18}}{\text{Density (Trycaprylin or Isooctane) in g/ml}} \times \frac{\text{(Concentration of } P_4 \text{ solution in step 18)ug/ml}}{\text{50 ml.}}$$

where density of trycaprylin is equal to 0.950 g/ml and
where density of icooctane is equal to 0.692 g/ml.

19. Transfer each of the solutions prepared in steps 17 and 18 into at least 10 vials of 1 ml capacity by means of 13 cm disposable glass pipette with bulb. Seal the vials with one piece aluminum seals using a manual crimper. These prepared vials are either loaded into the sample tray of the G.C, or stored in a dark and cool (20° C) place, if not in use. The procedure for the stability of P_4 in tricaprylin or isooctane by G.C was reported earlier in Report No. MSL-7144 and ES-87-SS-01 and a copy is attached.

B. Disposal of waste solutions, pipettes, and contaminate paper tissues:

All steps done outside N_2 glove box have to be burned inside the hood. As mentioned previously in the safety and preparation of solution, the steps require extreme care and precaution. The disposal of wastes also requires similar attention. For example, never mix waste solutions with different constituents into the same waste-bottle. Following is step-by-step disposal of waste material:

1. Half-fill a 5 gallon steel bucket with sand and cover the top of the sand with aluminum foil. Then place a 250 ml ceramic crucible into the metal bucket and place the bucket inside the hood.

2. Pour 2 ml of waste solution into the ceramic crucible and use a propane blowtorch to burn the wastes. **NOTE:** Always wear rubber apron, rubber gloves and face shield during this operation.

3. Make sure there are no more spontaneous sparks under continuous burning by the propane torch and wait for the crucible to cool to room temperature before adding more waste solution.

4. Perform similar procedures with glassware that contains small traces of waste material (similar to step 2.).

5. Dip all of the glassware in step 4 into a 50% NaOH solution and leave it overnight before cleaning several times with brush and water.

6. The waste paper tissues can be burned totally by blow torch and disposed in paper disposal bucket.

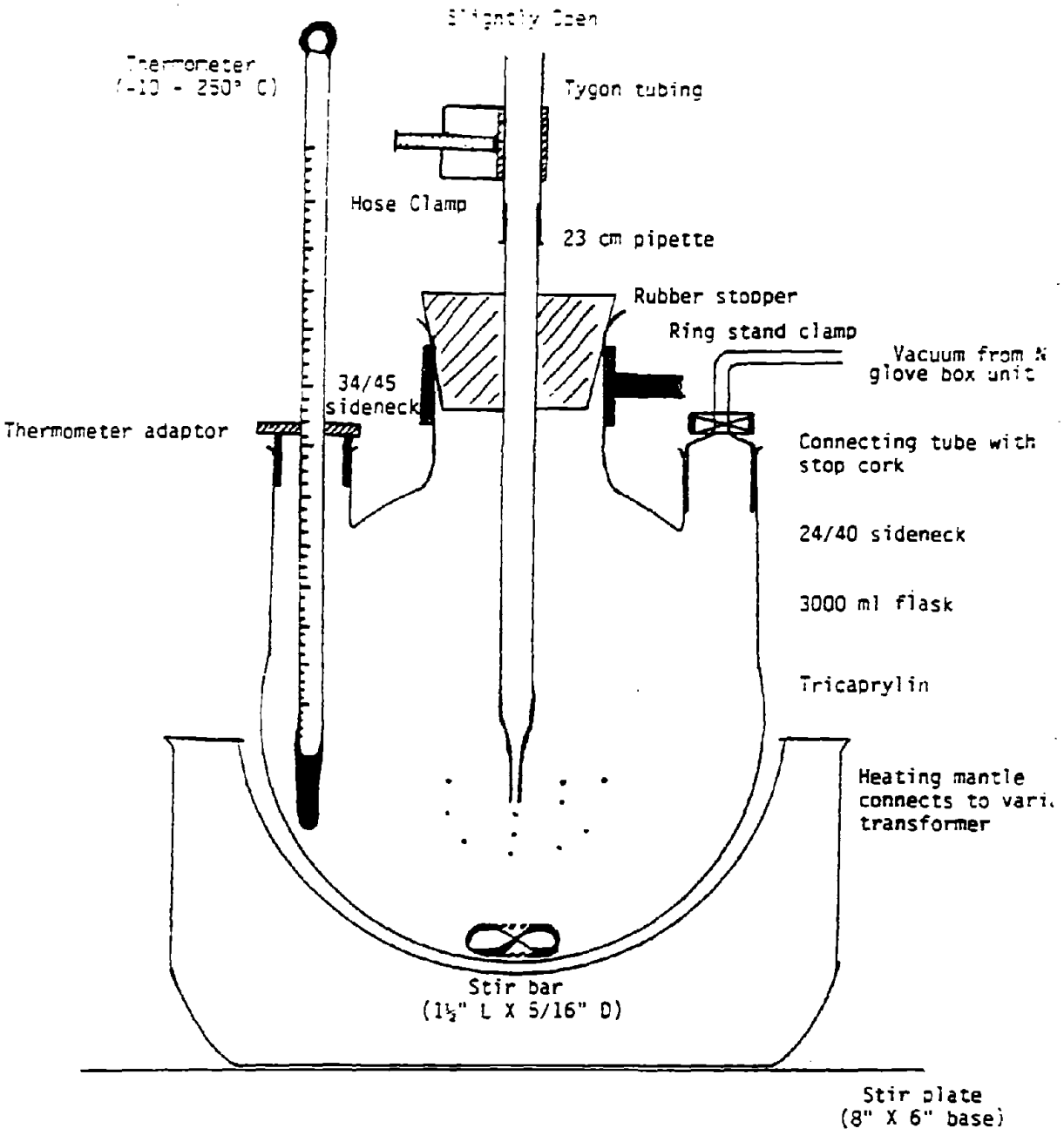

FIGURE 1: DEAERATION OF TRICAPRYLIN INSIDE N_2 GLOVE BOX

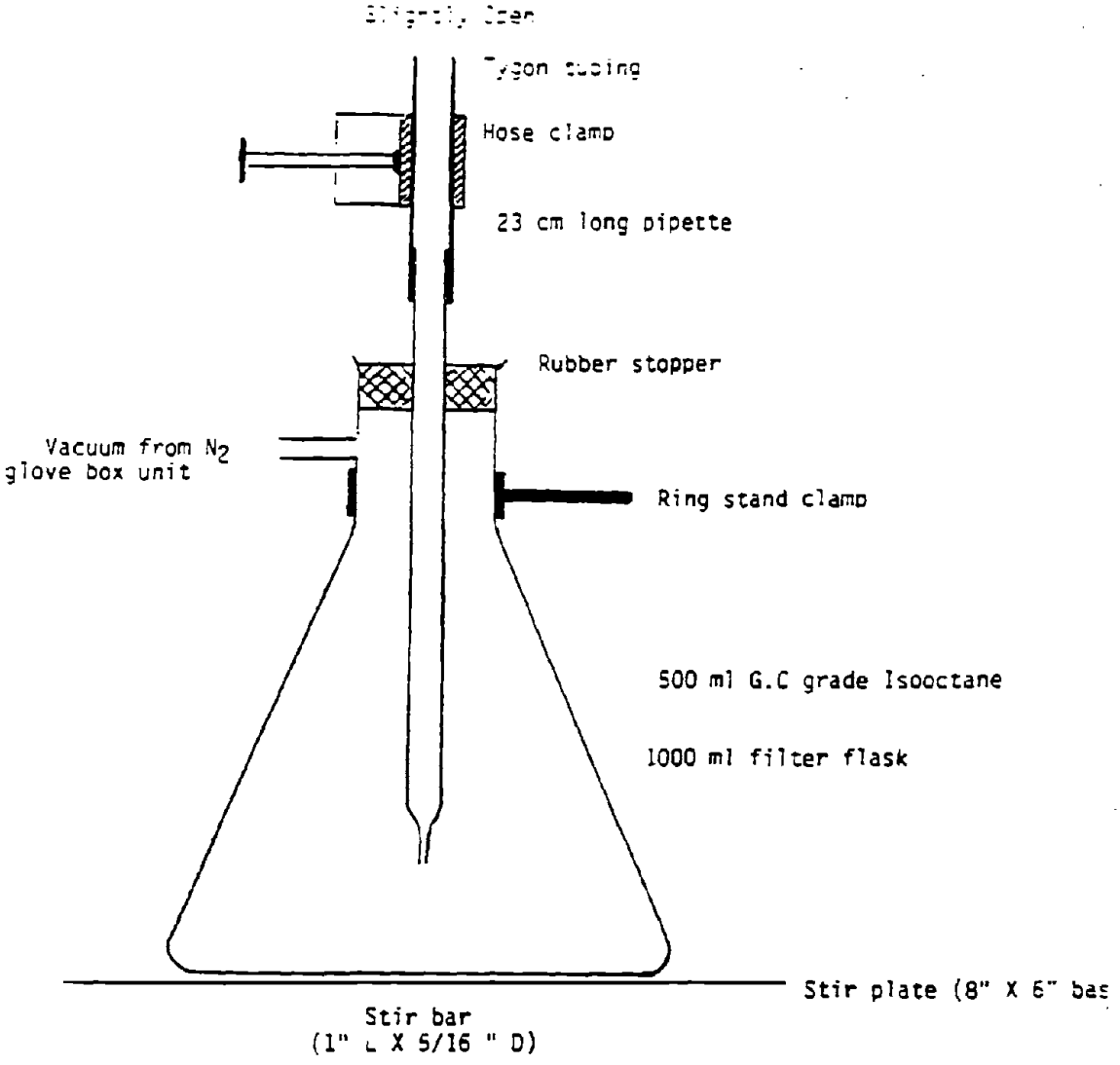

FIGURE II: DEAERATION OF ISOOCTANE INSIDE N_2 GLOVE BOX

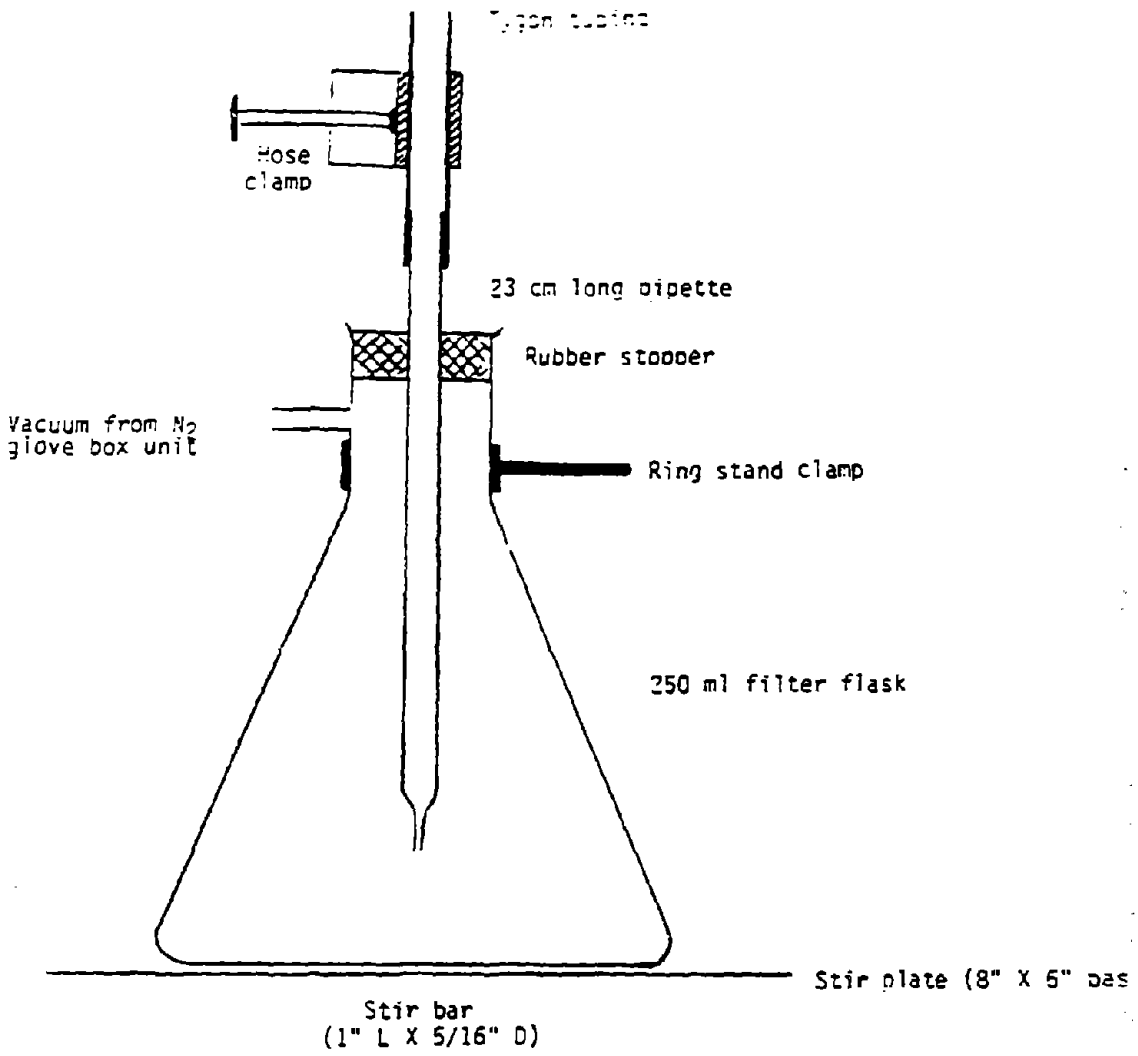

FIGURE III: DEAERATION OF METHANOL INSIDE N_2 GLOVE BOX

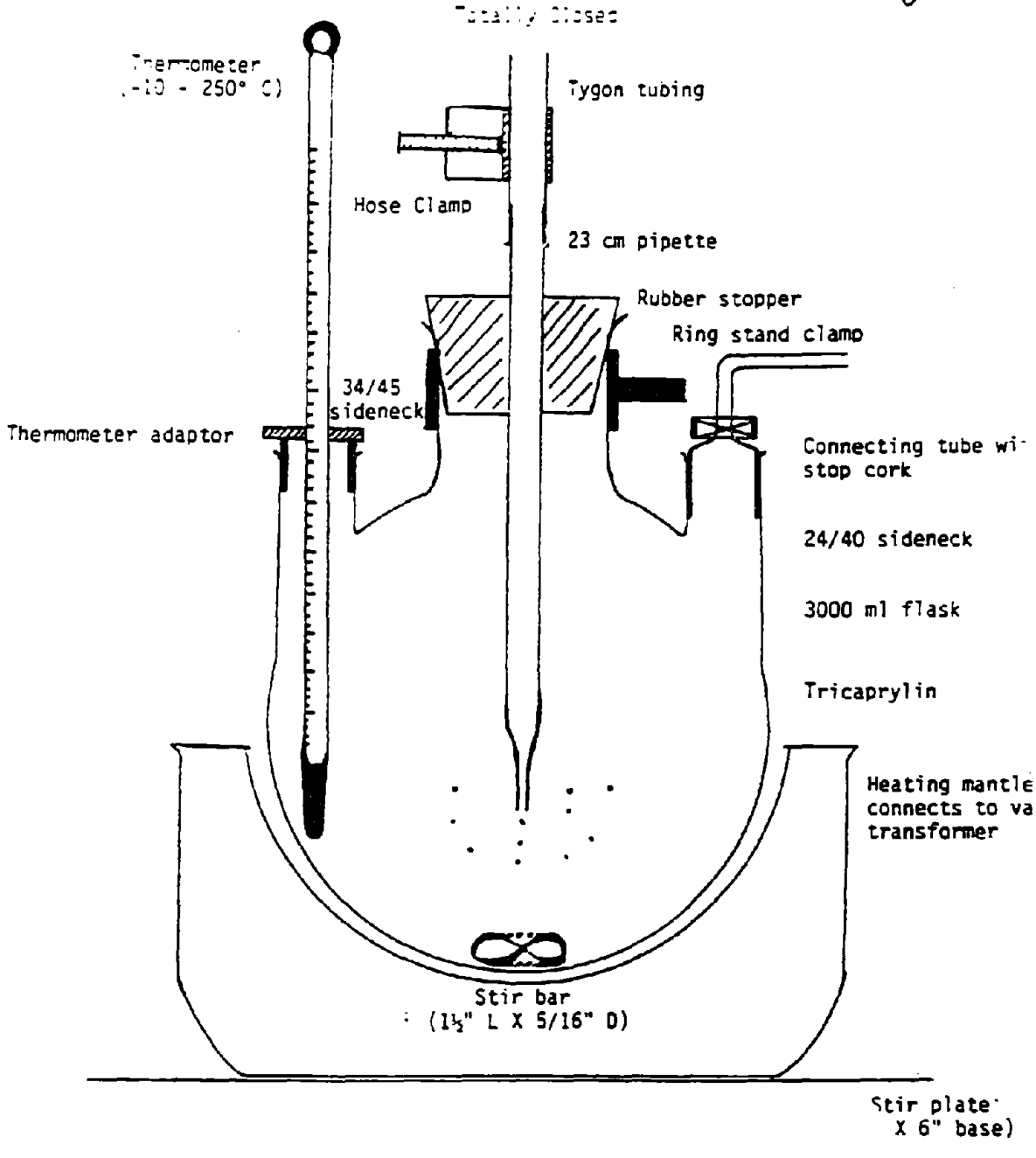

FIGURE IV: DISSOLVING P_4 IN DEAERATED TRICAPRYLIN INSIDE N_2 GLOVE BOX

AMMENDMENTS TO PROCEDURE

40

Page 7, No. 7: Delete this Step.

Page 7, No. 12: Change to: Transfer the chunk of phosphorus in Step 10 by means of a curved microforcep onto a clean paper tissue to dry off methanol by rolling the chunk several times. Transfer the chunk to a prepared balance and obtain its weight. Immediately transfer it to a 500 ml round bottom flask containing 250 ml of tricaprylin or corn oil.

Page 7, No. 13: Change to: Concentration of the stock solution is calculated by the equation:

$$\text{Concentration of } P_4 \text{ in stock solution (ug/ml)} = \frac{\text{mg } P_4 \text{ added}}{250 \text{ ml}} \times \frac{1000 \text{ ug}}{1 \text{ mg}}$$

Page 7, No. 14: Change to: Dissolve P_4 in deaerated vehicle at 60°C for 2 1/2 hours under continuous stirring. Make sure the phosphorus is totally dissolved by visual observation for at least 5 minutes. Cover the flask with aluminum foil during dissolving step. After P_4 is totally dissolved the dilution to the dose level is calculated using the following equation:

$$\text{ml of stock soln. needed} = \text{final volume needed (ml)} \times \frac{\text{concentration needed}}{\text{concentration stock soln.}}$$

Stir dose solution for 1/2 hour then transfer the solution to serum bottles for dosing.

Page 7, No. 15: Refer to Analytical Method for analysis for the remainder of the procedure.

ANALYTICL METHOD FOR THE DETERMINATION OF ELEMENTAL PHOSHORUS IN DOSING SOLUTIONS BY GAS CHROMATOGRAPHY

Method No.: BD-028-88

Sponsor: Monsanto Corporation
St. Louis, MO

Prepared by: Mark Edfort
Associate Chemist

Issued by: Bio/dynamics, Inc.
Department of Metabolism
and Analytical Chemistry
Mettlers Road, P.O. Box 2360
East Millstone, New Jersey 08875-2360

ANALYTICL METHOD FOR THE DETERMINATION OF ELEMENTAL PHOSHORUS IN DOSING SOLUTIONS BY GAS CHROMATOGRAPHY

1.0 SCOPE

This method describes the analytical procedure for the determination of elemental phosphorus in dosing solutions by gas chromatgraphy. The limit of detection is 0.2 ng injected (2 ul of 0.1 ug/ml standard).

2.0 PRINCIPAL

Concentrations of elemental phosphorus in corn oil and tricaprylin are determined by gas chromatography following appropriate dilution of the sample in iso-octane. The final determination is made using a flame photometric detector (FPD) at 130°C with a 6 foot column packed with 5% Dexil 410 on Chromosorb G 80/100.

3.0 EQUIPMENT

Warning: Elemental white phosphorus is spontaneously combustible and toxic. Iso-octane and Methanol are flammable. One carbon dioxide fire extinguisher is required at all times. In the event of a methanol or iso-octane spill of more than a 4 ml quantity in the nitrogen glove box, STOP all operations. MAKE SURE all phosphorus is in a closed bottle. Clean up spillage with tissues and flush the glove box for at least one hour with nitrogen at a rate of 6 cu. ft./hr. Remove all tissues and contaminated solvents from the glove box.

3.1 Drying oven (temp. up to 140°C)

3.2 Nitrogen glove box equipped with two nitrogen tanks. (See mixing procedure)

3.3 Analytical balance Mettlers AE 260 or equivalent

3.4 Stir plate

3.0 EQUIPMENT - continued

3.5 Approximately 600 ml HPLC grade Iso-octane

3.6 Approximately 200 ml HPLC grade Methanol

3.7 Magnetic stir bars:

10 - 1/8" x 1/2" stir bars
2 - 1 1/2 " x 5/15" stir bars
4 - 1" x 5/16" stir bars

3.8 Filter flasks: 1 liter and 500 ml

3.9 Beakers: 4 - 100 ml, 2 - 30 ml

3.10 Vial of purified elemental phosphorus supplied by Monsanto

3.11 Curved forceps (Fisher Cat. #08-953F)

3.12 Kimwipes

3.13 Aluminum foil

3.14 Class A volumetric flasks:

16 - 50 ml, 1 - 100 ml

3.15 Rubber stoppers

3.16 Dispo pasteur pipets

3.17 Tygon tubing

3.18 Scissors

3.19 Glass marker pen

3.20 2 - waste bottles

3.21 Ring-stand and ring-stand clamp

3.22 Screw cap GC vials with cap and septum

NOTE. All glassware and labware must be carefully cleaned and preheated to at least 140°C for one hour and immediately transferred to the nitrogen glove box. All equipment must be placed in the nitrogen glove box at least 24 hours before starting procedure. Nitrogen glove box is then purged with nitrogen at a rate of 2.5 cu. ft./hr for at least 24 hours prior to the start of the procedure. Make sure there is a positive nitrogen pressure at all times. Also, make sure all empty bottles, flasks and vials are opened during the nitrogen purge.

4.0 REAGENT PREPARATION

4.1 Deaeration of Iso-octane:

4.1.1 Deaerate approximately 600 ml of iso-octane at room temperature for at least 30 minutes as shown in Figure A. The flow of nitrogen is controlled with the valve above the stoppers shown in the Figure.

4.2 Deaeration of Methanol:

4.2.1 Deaerate approximately 150 ml of methanol at room temperature for ten minutes as shown in Figure B. The flow of nitrogen is controlled with the valve above the stopper as shown in the Figure.

5.0 PROCEDURE

5.1 Standard Preparation:

5.1.1 Pour a precut chunk of purified elemental phosphorus into a 30 ml beaker and use a short-edged 3-inch wooden spatula to cut the chunk of phosphorus in half.

5.1.2 Pour approximately 15 ml of deaerated methanol to a 30 ml beaker. Transfer a chunk of phosphorus from Step 5.1.1 (chunk of phosphorus should weigh approximately 60 mg) into the 30 ml beaker containing methanol.

5.1.3 Zero the digital balance.

5.1.4 Transfer the chunk of phosphorus from Step 5.1.2 onto a clean Kimwipe to dry methanol off.

5.0 PROCEDURE - continued

5.1 Standard Preparation - continued:

5.1.5 Transfer the chunk to a prepared balance and obtain its weight and immediately transfer it to a 100 ml volumetric flask containing approximately 50 ml of iso-octane. Bring the volume up to the mark with iso-octane.

5.1.6 Add a stir bar to the volumetric flask and wrap the flask with aluminum foil. Stir phosphorus in iso-octane for at least 1 1/2 hour at room temparature to dissolve. Make sure that the phosphorus is totally dissolved. This solution will be considered the stock standard and will be prepared fresh monthly. The concentration of the stock standard should be approximately 700 ug/ml.

5.1.7 Intermediate standard is prepared by weighing an amount of the stock standard prepared in section 5.1.6 directly into a 50 ml volumetric flask. Dilute to volume with iso-octane. The concentration of the intermediate standard should be approximately 40 ug/ml. The concentration of phosphorus with respect to the solution is calculated using the following equation:

Concentration of P_4 after dilution (ug/ml) =

$$\frac{\text{grams of stock standard}}{\text{density of iso-octane (g/ml)}} \times \frac{\text{concentration of stock standard (ug/ml)}}{50 \text{ ml}}$$

Density of iso-octane is equal to 0.692 g/ml.

5.0 PROCEDURE - continued

5.1 Standard Preparation - continued:

5.1.3 Injection standards are prepared by weighing four different amounts of the intermediate standards directly into 50 ml volumetric flask. These are brought to volume with iso-octane. The standard range should be between 0.1 and 1.0 ug/ml. Standards are stirred for 10 minutes prior to use. All standards are stored at room temperature in the nitrogen glove box. All standards are prepared fresh monthly.

5.2 Sample Preparation:

Samples are diluted to 50 ml with iso-octane to fall within the standard range. Samples are diluted in duplicate and injected in triplicate to arrive with an average concentration per sample. The concentration of phosphorus with respect to the solution is calculated using the following equation:

$$\frac{\text{grams of stock solution}}{\text{density of vehicle (g/ml)}} \times \frac{\text{concentration of stock solution (ug/ml)}}{50 \text{ ml}}$$

Density of tricaprylin = 0.950 g/ml
Density of corn oil = 0.921 g/ml

6.0 CHROMATOGRAPHIC ANALYSIS

A standard curve is generated by injecting at least three different concentration standards at the start of the run, a standard after every four samples and at the end of the run. The peak area of phosphorus versus concentration of phosphorus is plotted to construct the standard curve. A standard correlation coefficient is then calculated by linear regression and the sample concentrations are obtained using this coefficient. A typical standard curve is shown in Figure C. Gas chromatographic conditions are given in Table A. Typical sample and standard chromatograms are depicted in Figure D.

Mark Edfort 12-9-88
Mark Edfort Date
Associate Chemist
Department of Metabolism
and Anlytical Chemistry

James C. Eschbach 12/9/88
James C. Eschbach Date
Manager
Department of Metabolism
and Anlytical Chemistry

TABLE A: GAS CHROMATOGRAPHIC CONDITIONS FOR THE ANALYSIS OF ELEMENTAL PHOSPHORUS IN DOSING SOLUTIONS

Instrument:	Varian 6000 Gas Chromatograph equipped with FPD Varian 8000 Autosampler Varian 402 Integrator
Column:	6 ft x 2 mm ID glass
Stationary Phase:	Dexil 410
Support:	Chromosorb G 80/100
Carrier Gas:	He
Rate:	20 ml/minute
Temperature:	
Column:	130°C
Detector:	250°C
Injector:	225°C
Detector Flows:	
H_2	140 ml/minute
Air 1	80 ml/minute
Air 2	170 ml/minute
Attenuation:	128
Samples Size:	2 ul

FIGURE A: DIAGRAM OF FILTER FLASK SET UP FOR THE DEAERATION OF ISO-OCTANE

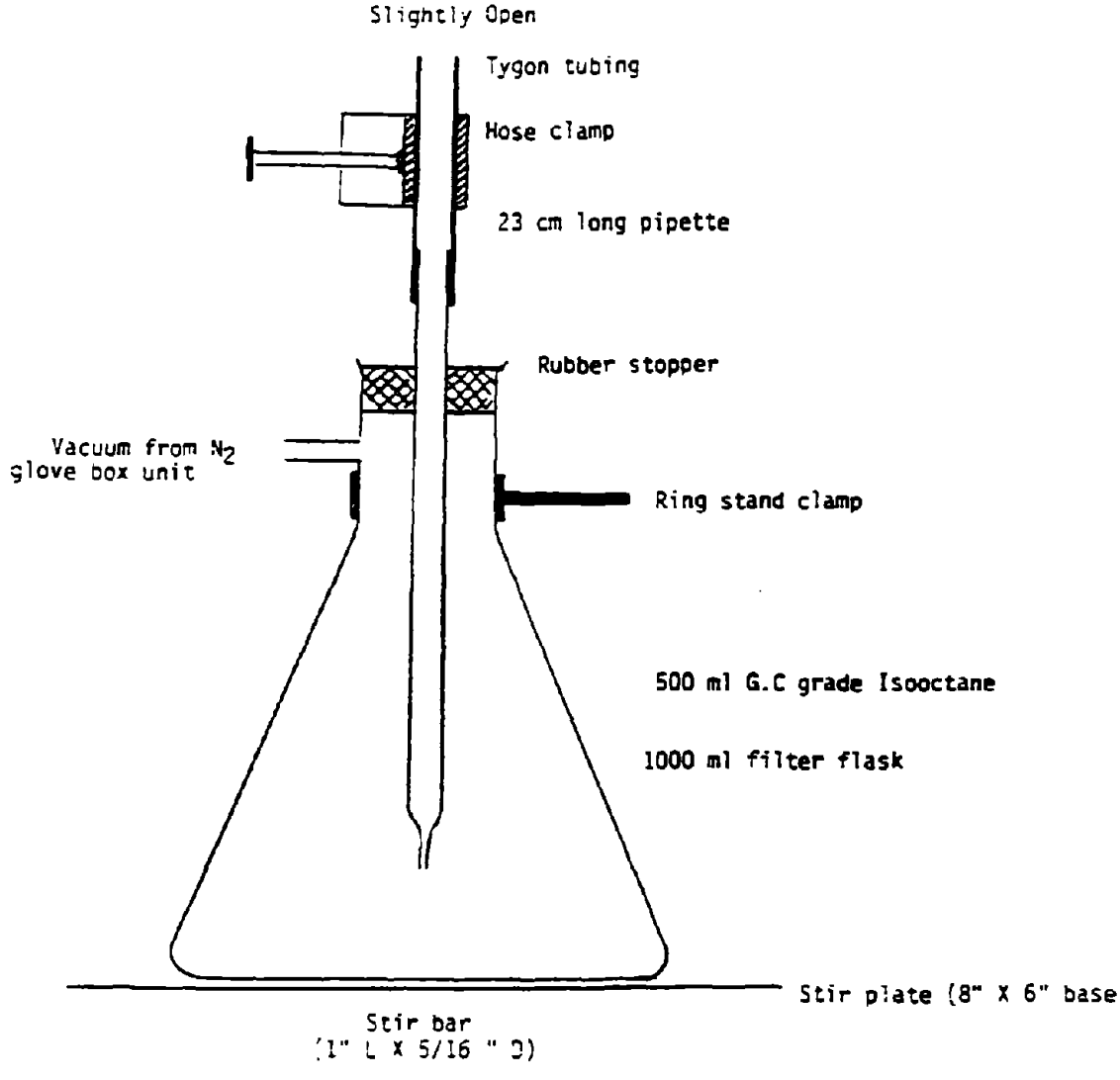

FIGURE 8: DIAGRAM OF FILTER FLASK SET UP FOR THE DEGERATION OF METHANOL

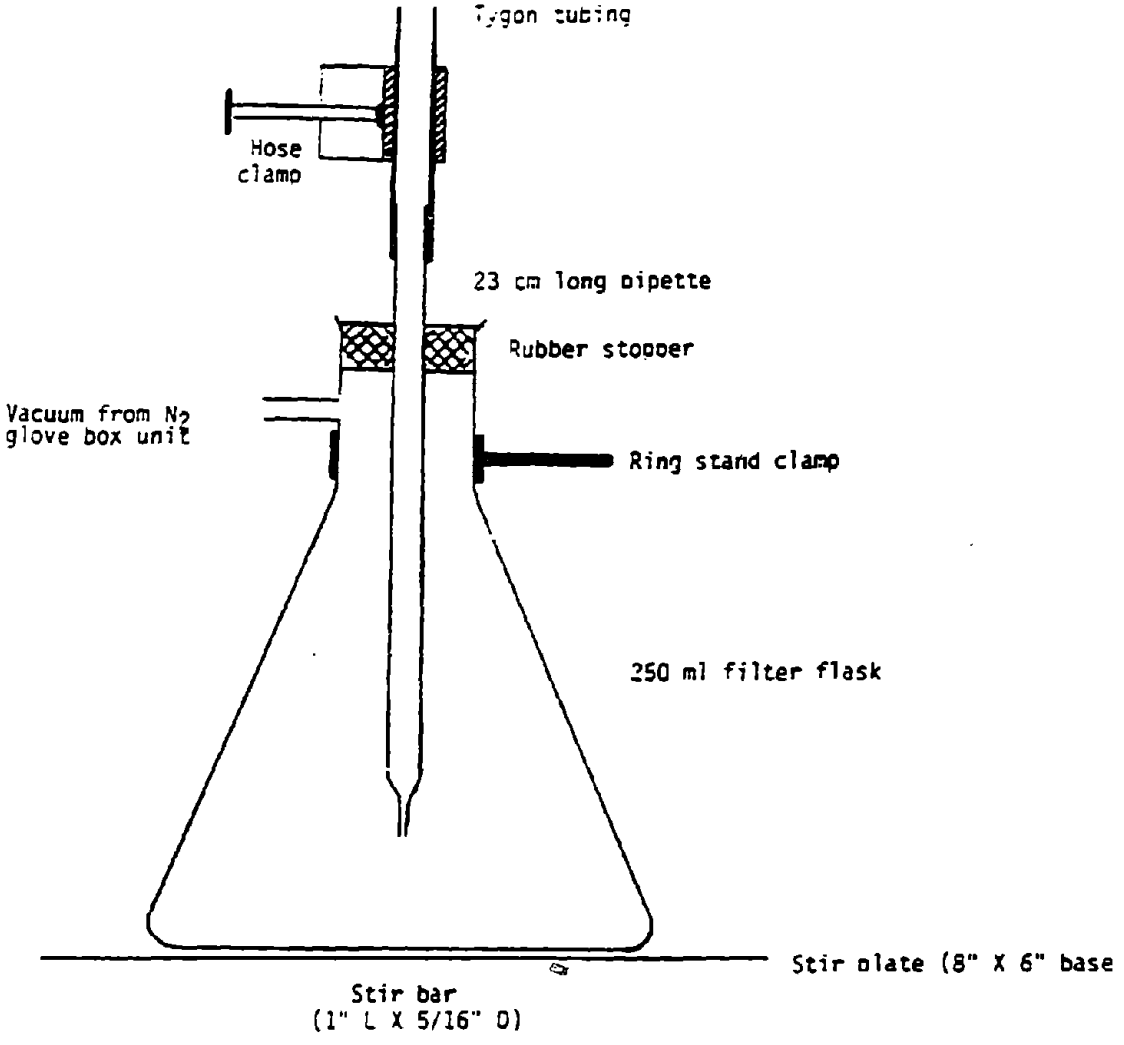

FIGURE [illegible] TYPICAL STANDARD CURVE
OF ELEMENTAL PHOSPHORUS

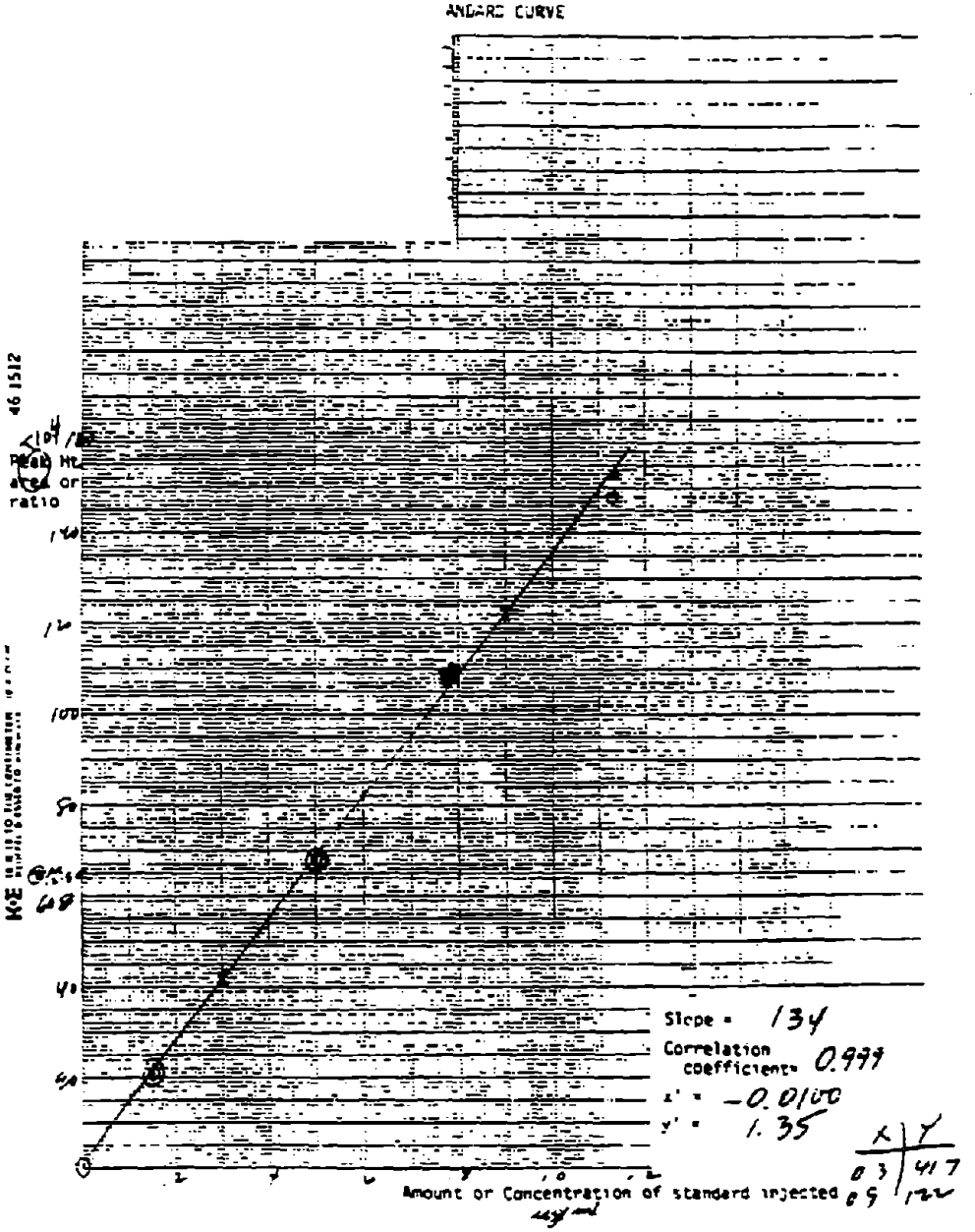

X	Y
03	417
09	122

FIGURE D: TYPICAL CHROMATOGRAMS OF ELEMENTAL PHOSPHORUS

TITLE ELEMENTAL PHOSPHORUS 10:56 2 DEC 88

CHANNEL 1 : (3) SAMPLE: 0.1503ug/ml METHOD: PHOSPHORUS

PEAK NO	PEAK NAME	RESULT	TIME (MIN)	AREA COUNTS	SEP CODE
1	PHOSPHORUS	100.0000	4.303	200846	BB
TOTALS:		100.0000		200846	

MULTIPLIER: 1.00000

PEAK: 1 of 1 VIAL: 8 INJ: 1

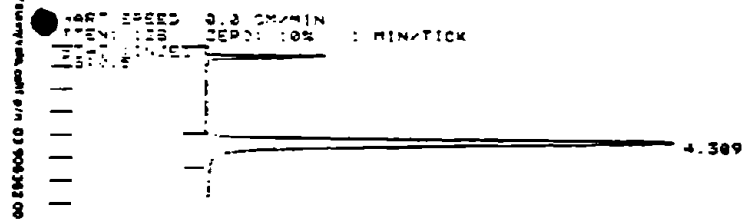

TITLE: ELEMENTAL PHOSPHORUS 10:39 2 DEC 88

CHANNEL 1 : (1) SAMPLE: 1.1312ug/ml METHOD: PHOSPHORUS

PEAK NO	PEAK NAME	RESULT	TIME (MIN)	AREA COUNTS	SEP CODE
1	PHOSPHORUS	100.0000	4.309	1483650	BB
TOTALS:		100.0000		1483650	

MULTIPLIER: 1.00000

PEAK: 1 of 1 VIAL: 9 INJ: 1

MASTER FILE
Project No. IR-82-215

ATTACHMENT 2 CONTAINS NO CBI

53

International Research
and Development Corporation
MATTAWAN, MICHIGAN, U.S.A. 49071 TELEPHONE (616) 668-3336

SPONSOR: Monsanto Company

TEST ARTICLE: Elemental Phosphorus

SUBJECT: One Generation Reproduction Study in Rats with Elemental Phosphorus (IR-82-215)

DATE OF SUBMISSION: January 22, 1985

401-189

54

International Research
and Development Corporation

January 22, 1985

Dr. Rashmi Nair - G2WD
Monsanto Company
800 North Lindbergh Boulevard
St. Louis, Missouri 63167

Ref: 401-189 (IR-82-215)

Dear Dr. Nair:

Enclosed are three copies of the final report on your One Generation Reproduction Study in Rats with Elemental Phosphorus (IR-82-215).

In general, your comments have been incorporated in the final report. We feel that additional explanation is necessary for several items. In regards to the number of dead F_{1a} pups, it has been determined that a total of 47 were found dead and subsequently necropsied. Of the original 49 mentioned in the text, two were sacrificed due to death of the dam. Sixteen were missing, or partially cannibalized and discarded without necropsy being performed. The discrepancy of five between your total of 58 and our total of 63 is due to five pups from litter #18049. These pups were found dead and necropsied, however, were not included in the pup survival index because of the death of their dam. This has been clarified both in the text and on the appropriate summary table.

Reevaluation of the F_{1b} litter data and necropsy records revealed that 31 pups were found dead and necropsied, while 12 were either missing, or partially cannibalized and discarded without necropsy being conducted.

The female fertility values for the low- and high-dose groups in the F_{1b} mating were verified as correct. One female from each of these groups died on an early gestation day, and because pregnancy status for either animal could not be determined, they were excluded from the index calculation. An appropriate footnote has been added to the F_{1b} Summary of Gestation and Lactation Data (Table 9).

If you should have any questions relative to the enclosed report, please do not hesitate to contact me.

Sincerely,

James L. Schardein, M.S.
Assistant Director, Toxicology
Division and Director of
Reproduction and Teratology

JLS:sce

Enclosures

Mattawan, Michigan 49071 U.S.A. • telephone: (616) 668-3336 • telex: 224302 • cable: IRDC MAAN

TABLE OF CONTENTS

TABLE OF CONTENTS
(Continued)

TABLE OF CONTENTS
(Continued)

TABLE OF CONTENTS
(Continued)

Table No. Cont.

TABLE OF CONTENTS
(Continued)

60

I. SUMMARY: One Generation Reproduction Study in Rats with Elemental Phosphorus (IR-82-215)
IRDC Study 401-189
Initiated October 19, 1982
Terminated May 16, 1983

Elemental phosphorus was administered orally by gavage to Charles River COBS® CD® rats at dosage levels of 0.005, 0.015 and 0.075 mg/kg/day at a dose volume of 5 ml/kg. Administration of the test and control articles (corn oil) to both sexes began 80 days prior to mating. The F_0 generation was mated twice to produce "a" and "b" offspring. In males dosing continued until sacrifice. Administration to the females continued through gestation and weaning of the pups. Individual dosages were based on the most recent weekly body weights.

A. EXPERIMENTAL DESIGN/METHODS

TEST ARTICLE

Identification:	Elemental phosphorus Fisher Lot # 701628
Concentrations:	0.001, 0.003, 0.015 mg phosphorus/ml of prepared test material
Analysis:	Conducted at IRDC; the prepared test solutions were stirred overnight using a magnetic stir plate and bars and analyzed after complete dissolution of the phosphorus. Prior to administration to the test animals, samples from each level and batch were analyzed in duplicate.

TEST SYSTEM/IN-LIFE OBSERVATIONS

Animals:	Charles River COBS® CD® rats, Charles River Breeding Laboratories, Portage, MI, 56 days (8 weeks) of age at initiation.

Dosage Groups:	**Dosage level (mg/kg/day)**	**Number of Rats**	
		Male	**Female**
	0 (Control)	15	30
	0.005	15	30
	0.015	15	30
	0.075	15	30

Randomization Procedure: Computerized random selection with animals more than ± 1.5 standard deviation from the quarantine population body weight mean eliminated prior to randomization. Homogeneity of group mean body weight variances was used as the criterion for acceptance.

Housing/Environmental Conditions: All animals were housed in an environmentally controlled room with an average temperature of 23 ± 2°C and average humidity of 50 ± 15 percent. Fluorescent lighting provided illumination 12 hours per day. During the study, rats were housed individually in suspended wire-mesh cages except during mating, gestation and lactation. During these periods, animals were housed in plastic cages with wood shaving bedding. On gestation day 0, the females were housed individually in the plastic cages, until the end.

Diet: Certified Ralston Purina Rodent Chow® #5002; available *ad libitum* during acclimation and throughout study.

Observations: All parental animals were observed for mortality and signs of overt toxicity twice each day (morning and afternoon), seven days a week. If mortality or signs of overt toxicity were observed, these were recorded on the day observed.

Observations (Cont): During treatment, a detailed clinical observation of each animal was performed weekly and the findings recorded.

Measurements:

Body Weights: Parental males and females were weighed weekly during treatment until sacrifice. Females were also weighed on gestation days 0, 7, 13 and 20 and on days 0, 7, 14 and 21 of lactation.

Food Consumption: Individual food consumption was measured for all parental animals weekly except during the mating period when the animals were cohabitating.

Mortality: Any rat showing signs of severe debility or toxicity, particularly if death appeared imminent, was sacrificed to prevent loss of tissues through autolysis. All rats sacrificed *in extremis* or found dead were subjected to a routine necropsy procedure.

Estrous Cycle Determinations: Ten days prior to mating and until evidence of copulation was observed or the mating period ended, the females were smeared daily to establish estrous cycles.

Reproductive and Litter Parameters: Specific reproductive observations included tabulation of male and female fertility indices and the length of gestation. Any abnormalities in nesting and nursing behavior and difficulties at parturition were recorded. Litter parameters assessed included mean number of live and stillborn pups per litter (litter size), pup survival through weaning, pup weight at birth and at specified intervals during lactation and general appearance and behavior.

STATISTICS

Methods:

All statistical analyses compared the treatment groups to the control group with the level of significance at $p<0.05$ and $p<0.01$. The male and female fertility indices were compared using the Chi-square test criterion with Yates' correction for 2 x 2 contingency tables and/or Fisher's exact probability test as described by Siegel to judge significance of differences. Pup survival indices were compared by the Mann-Whitney U-test as described by Siegel and Weil to judge significance of differences. Parental body weights (at the study week prior to mating and at termination of generation), mean number of live pups per litter at birth and mean pup body weights taken on lactation days 0, 4, 7, 14 and 21 were compared by analysis of variance (one-way classification), Bartlett's test for homogeneity of variances and the appropriate t-test (for equal and unequal variances), as described by Steel and Torrie using Dunnett's multiple comparison tables to judge significance of differences.

Randomization:

Animal numbers and corresponding body weights were entered onto magnetic tape which was used as the data source for the randomization procedure. The mean body weight and standard deviation were calculated by sex and a computer-generated edit developed a listing of those animals whose body weights were within $\pm$ 1.5 standard deviations of the mean. From the qualifying animals, the randomization procedure selected and assigned the required number

Randomization (Cont.):

of animals. Bartlett's test for homogeneity of variances was applied to the groups. If the group variances were judged to be nonhomogeneous, new randomizations were generated until homogeneity was established.

B. RESULTS

Three F_0 male rats did not survive until study termination: One male in the control group died due to cystitis, one low-dose male died due to an intubation error and one male in the low-dose group was sacrificed in extremis. The F_0 male deaths were not considered treatment-related. Four, one, one and sixteen F_0 females in the control, low-, mid- and high-dose groups, respectively, died during the study. Thirteen females in the high dose group, seven in the F_{1a} and six in the F_{1b} matings, died on gestation days 21 or 22. These deaths may have resulted from difficulties at parturition. Except for one female in the control group that died due to an intubation error and one high-dose female that died due to a rupture of the uterine wall, the cause of death could not be determined for the remaining F_0 females that died on study.

There were no meaningful differences in the antemortem and necropsy observations between the control rats and rats in treated groups that survived to study termination. During both the F_{1a} and F_{1b} overall gestation and lactation periods, the group mean maternal body weight change values of the treated groups were comparable to the control group values. Male and female fertility indices and the length of gestation of all treated groups in both the F_{1a} and F_{1b} matings were comparable to the control group. Treatment related reductions in the mean numbers of viable pups at birth and an increase in the mean numbers of stillborn pups occurred at the high-dose level during both matings in comparison to the control group values. There was also a reduction in pup survival at lactation day 0 for this dosage group during the F_{1a} mating when compared to the control group value.

There were no meaningful differences in the litter parameter values (pup survival to weaning, pup weight at birth, pup weights during lactation) of the treated groups when compared to those of the control

group. Also, no physical or behavioral differences were observed between pups in the treated groups and those in the control group. Necropsy examinations of pups that died during study did not reveal any meaningful differences between the control and treated groups. There were no macroscopic or microscopic compound-related changes observed during postmortem examination of animals from the F_0, F_{1a} or F_{1b} generations.

In conclusion, it was determined that elemental phosphorus administered orally by gavage at a dosage level of 0.075 mg/kg/day adversely affected parturition, decreased the mean number of viable pups at birth and increased the mean number of stillborn pups in Charles River COBS® CD® rats. Similar findings were not observed at dosage levels of 0.015 mg/kg/day or less.

To the best of my knowledge, there were no significant deviations from the Good Laboratory Practice Regulations which affected the quality and integrity of the study. This study was conducted in conformance with the Good Laboratory Practice Regulations. This report accurately reflects the raw data obtained during the performance of the study.

Approved And
Submitted By: _____ 12/27/84

James L. Schardein, M.S.
Director of Reproduction and
Teratology
Assistant Director of Toxicology
Division
Study Director

Date

II. QUALITY ASSURANCE STATEMENT

Study Title: One Generation Reproduction Study in Rats with Elemental Phosphorus (IR-32-215)

Test Article: Elemental Phosphorus

The conduct of this study has been subjected to periodic inspections. The dates of inspection and the dates that findings were reported to management and the Study Director are listed in Appendix A.

This report has been reviewed by the International Research and Development Corporation Quality Assurance Department in accordance with the United States Food and Drug Administration Good Laboratory Practice Regulations of June 20, 1979.

Approved And Submitted By: _____ 1/21/85

Patrick E. Trester, B.S.
Director of Quality Assurance

Date

401-189

III. INTRODUCTION

This study was conducted in accordance with the protocol as approved by the Sponsor and in compliance with the Standard Operating Procedures of International Research and Development Corporation (IRDC). Procedures pertinent to this study are described herein.

A. OBJECTIVE

The objective of this study was to determine the effect of the test article on fertility, parturition, neonatal viability, growth of the newborn and reproductive performance in rats. The study design utilizes treatment of both sexes.

B. SPECIES SELECTION

The rat is an acceptable model for reproduction studies. This laboratory has historical control data on the fertility, neonatal survival indices and growth rates and the reproductive performance in rats of this strain from this source.

C. JUSTIFICATION FOR ROUTE OF ADMINISTRATION

The test article was administered orally by gavage as this was one of the potential routes of exposure to humans.

D. DATA RETENTION

All preservable specimens, raw data, a sample of the test article and copies of the final report are retained in the International Research and Development Corporation Archives in Mattawan, Michigan.

IV. TEST ARTICLE

A. RECEIPT AND DESCRIPTION

The test article was received from Fisher Scientific Co., Fair Lawn, New Jersey on February 16, 1982 as indicated below:

Label	Description
P-104 500 g (1.1 lb.) Phosphorus Yellow Sticks - 5/8" Diameter Lot 701628	Yellow solid

B. TEST ARTICLE SAMPLES

The stability of phosphorus in corn oil has been established as at least 17 days by the Sponsor. The prepared test solutions were stirred overnight using a magnetic stir plate and bars and analyzed 24 hours after preparation to allow for complete dissolution of the phosphorus. Prior to administration to the test animals, samples from each level and batch were analyzed in duplicate. Assay values which deviated from expected ranges were considered out of tolerance and were not administered to the animals. A replacement solution was prepared immediately and analyzed.

C. TEST ARTICLE PREPARATION AND ADMINISTRATION

1. Base Solution Preparation

The base solution was prepared in the following manner. A stick of elemental phosphorus was quickly transferred to a pan of water. A piece approximately 2 mm thick was cut and transferred to a beaker of water. Approximately 10 ml of water was added to an Erlenmeyer flask. The outside and inside of the neck were dried and the flask, with stopper,

was tared on an analytical balance using care to avoid wetting the stopper. The piece of elemental phosphorus was transferred from the beaker of water to a beaker containing acetone. The elemental phosphorus was then transferred to a paper towel, turned once or twice to dry the acetone, and then quickly transferred to the tared Erlenmeyer flask. The stoppered flask containing the elemental phosphorus was then reweighed to determine the weight of the test article. The required amount of vehicle, corn oil, needed to achieve the proper concentration of 1.0 mg elemental phosphorus/ml prepared base solution was calculated. The appropriate amount of corn oil was then added to a stoppered bottle. The bottle was purged with CO_2. The piece of elemental phosphorus was transferred to the beaker of acetone and dried on a paper towel, as before, then quickly added to the bottle containing the required volume of oil. The bottle was repurged with CO_2 and stoppered tightly. The bottle was immersed in a hot water (60°C) bath and shaken to dissolve the elemental phosphorus. The solution was stirred on a magnetic stir plate for at least 24 hours.

2. Groups 2, 3 and 4 Preparation

The corn oil used for the base solution and these dilutions had the air removed by heating the oil in a suction flask and stirring with a magnetic stir bar.

The required amount of oil for each group was transferred to the appropriate bottles. These bottles were purged with CO_2. A syringe was purged with CO_2. The bottle of base solution was pierced with a needle and CO_2 was expelled into the bottle. The bottle was inverted and the syringe was drawn full. Any bubbles were expelled into the base solution bottle. The volume in the syringe was adjusted to the exact quantity required before removing the needle. The appropriate purged bottle containing diluent oil was pierced with the needle, the base solution was expelled into the bottle, and the needle and syringe were

withdrawn. The bottles were shaken to ensure a homogeneous mixture. The test article was prepared, approximately, every two weeks at concentrations to permit the administration of dose levels 0.005, 0.015, and 0.075 mg/kg/day at a constant dosage volume of 5 ml/kg.

The test article was administered orally by gavage as a single dose at approximately the same time each day. Administration of the test article to both sexes began 80 days prior to mating. In males, dosing continued until sacrifice. Administration to the females continued through gestation and weaning of the pups. The control group received the vehicle only, corn oil, on a comparable regimen at a volume of 5 ml/kg. Individual dosages were determined from the most recent weekly individual body weights.

3. Analysis

a. Analytical method for the determination of phosphorus in test solutions.

(1) Equipment

- Instrument. Varian Aerograph model 3700 equipped with an F.P.D. and operated in the phosphorus mode.
- Column. 6' x 2 mm I.D. glass column packed with 1.5% OV 101 on 100-120 mesh Chromosorb G.H.P.
- Analytical balance
- Miscellaneous glassware washed with dilute hydrochloric acid, deionized water and acetone.

(2) Reagents

Hydrochloric acid
Acetone
Isooctane UV grade

(3) Gas chromatographic conditions

Temperature: Column 95°C, Detector 235°C, Injector 230°C
Carrier/flow: Nitrogen/24 ml/min
Injection volume: Variable
Attenuation: Variable

The parameters were varied as required in order to achieve the desired chromatographic characteristics of the test article.

(4) Cleaning of Elemental Phosphorus:

(A) Place a portion of phosphorus under distilled or deionized H_2O in a shallow dish. Use a spatula or small knife and tongs to scrape off as much of the oxidized coating as possible. Be careful to keep phosphorus under water at all times. Rinse with distilled H_2O.

(B) Rinse the test article with acetone and place in container with ∿ 100 ml isooctane. Swirl gently until any remaining oxide coating is dissolved. Remove cleaned test article from isooctane, rinse with acetone, and place in small jar containing enough fresh distilled H_2O to cover test article. Purge jar with N_2 and cap securely. Cover jar completely with aluminum foil and store in a cool dark place until needed.

(5) Standards Preparation:

(A) Original Stock Solution:

Take a small clean piece of test article (about 20 mg) and rinse thoroughly with acetone. Quickly dry with paper toweling and place into a tared 100 ml volumetric flask containing about 20 ml of isooctane. Reweigh the flask to determine weight of test article added (to the nearest 0.1 mg). Dilute to volume with isooctane and mix until test article is dissolved. Test article is very slow to dissolve. Prepared in this manner, the stock solution contains about 200 µg/ml test article which is near the saturation point of test article in isooctane. If a test article stock solution of a higher concentration is used, the original stock solution may be made using toluene as the solvent.

(B) Working Stock Solution:

Make up a 10 µg/ml solution at this point to prepare actual G.C. standards. Calculate the ml of original stock solution needed per 100 ml working stock solution. The ml needed can be measured out using volumetric pipets or by assuming the density of isooctane to be 0.688 g/ml and weighing the original stock solution into a tared 100 ml volumetric flask then diluting to the mark.

(C) G.C. Working Standards:

Prepare working standards in the 10, 32 and 180 µg/l range for use with Groups 2, 3 and 4, respectively, by diluting appropriate aliquots of the 10 µg/ml stock standard with isooctane. All standard solutions should be tightly capped, sealed with tape and stored in a cool dark place.

(6) Preparation of Corn Oil Samples:

Tare a series of volumetric flasks and, using a plastic disposable syringe, transfer 80-110 mg of prepared test material into respective flasks and re-weigh. Record weight to nearest 0.1 mg. Dilute to mark with isooctane and record weight. Mix well. Sample is ready for analysis.

(7) G.C. Analysis:

Inject equal volumes of sample and the appropriate standard into a chromatograph set up as described in step 3.

(8) Calculations:

$$\text{µg Test Article/liter Found} = \frac{\text{Peak Height (mm) Sample} \times \text{µg/liter Standard}}{\text{Peak Height (mm) Standard}}$$

$$\text{µg Test Article/ml in Sample} = \frac{\text{µg/L Test Article Found in Sample} \times \text{g (Solvent \& Sample)} \times 0.914^{1}}{\text{mg Standard} \times 0.688^{2}}$$

[1] 0.914 = density of corn oil
[2] 0.688 = density of isooctane

4. Results

a. Results of Periodic Test Solution Analysis

All test solutions analyzed prior to use from study week 2 through 31 and found to contain within ± 15% of the target test article concentration were certified for use. The mean concentration of all the certified solutions ranged from 99 to 101% of the desired levels. Although the ± 15% specification was set at the end of study week 1, the week 1 results were within 15% of the target values.

The data are summarized in Table 1.

Joseph H. Thorstenson, Ph.D.
Director of Analytical Chemistry

1/7/85
Date

TABLE 1. Percent of Target Test Article Levels Found in Test Solutions

Group	Dosage Level mg/kg/day	Solutions Prepared for Study Weeks 1	2,3	4,5	6-8	8-10	10-12	12-14	14-16
2	0.005	108,103 (106)	110,105 (108)	97,100 (99)	93,98 (96)	96,100 (98)	103,105 (104)	98, 99 (99)	95,96 (96)
3	0.015	107,108 (108)	102,105 (104)	91, 94 (93)	97,99 (98)	109,111 (110)	100,103 (102)	102,101 (102)	93,87 (90)
4	0.075	106,103 (105)	100, 98 (99)	83,85,89,96 (88)	98,97 (98)	105,107 (106)	101, 99 (100)	97,102 (100)	87,94 (91)

Group	Dosage Level mg/kg/day	Solutions Prepared for Study Weeks 16-18	18-20	20-22	22-24	24-26	26-28	28-30	30,31	Mean ±S.D.
2	0.005	95,94 (95)	95,100 (98)	103,101 (102)	100,103 (102)	107,110 (109)	101,103 (102)	105,102 (104)	102,104 (103)	101 ±4.3
3	0.015	96,96 (96)	101, 99 (100)	99, 98 (99)	97, 96 (97)	113,111 (112)	100,104 (102)	107,112 (110)	98, 98 (98)	101 ±6.3
4	0.075	99,90 (95)	98, 97 (98)	97, 97 (97)	95, 94 (95)	107,101 (104)	101, 98 (100)	104,103 (104)	100,101 (101)	99 ±4.9

( ) - Average of replicate assays
Mean ± S.D. is calculated on the basis of the average of replicate assays found
S.D. = Standard deviation

V. STATISTICS

A. METHODS

1. F_0 Randomization Procedure

Animal numbers and corresponding body weights were entered onto magnetic tape which was used as the data source for the randomization procedure. The mean body weight and standard deviation were calculated by sex and a computer-generated edit developed a listing of those animals whose body weights were within $\pm$ 1.5 standard deviations of the mean. From the qualifying animals, the randomization procedure selected and assigned the required number of animals. Bartlett's test for homogeneity of variances was applied to the groups. If the group variances were judged to be nonhomogeneous, new randomizations were generated until homogeneity was established.

2. Data Analysis

All statistical analyses were two-tailed with a level of significance of $p<0.05$. Significance at $p<0.01$ was also indicated.

a. Parental Body Weights

Parental body weights by sex were analyzed on the week prior to the F_{1a} mating (week 11), the week prior to the F_{1b} mating (week 21) and at termination of the generation (week 30), by one-way analysis of variance and Bartlett's test for homogeneity of variances. Treatment groups were compared to the control group using the appropriate t-statistic (for equal or unequal variances) as described by Steel and Torrie[1] and Ostle[2]. Significant differences were determined using Dunnett's[3] multiple comparison tables.

b. Male and Female Fertility

Male and female fertility indices were compared using the Chi-square test criterion with Yates' correction for 2 x 2 contingency tables and/or Fisher's exact probability test as described by Siegel[4] to judge levels of significant differences.

c. Pup Survival Indices

The proportion of live pups at birth per total number born and the survival indices at lactation days 4, 7, 14 and 21 were compared by the Mann-Whitney U-test as described by Siegel[4] and Weil[5] to judge significant differences.

d. Litter Size and Pup Body Weights

The mean numbers of liveborn pups per litter and mean body weights of pups were analyzed by one-way analysis of variance and Bartlett's test for homogeneity of variances. Treatment groups were compared to the control group using the appropriate t-statistic (for equal or unequal variances) as described by Steel and Torrie[1] and Ostle[2]. Significant differences were determined using Dunnett's[3] multiple comparison tables.

B. RESULTS

The results of the data analyses are discussed in the appropriate sections of the report.

R. John Weaver, M.S.
Director of Statistics

12-27-84
Date

c. Pup Survival Indices

The proportion of live pups at birth per total number born and the survival indices at lactation days 4, 7, 14 and 21 were compared by the Mann-Whitney U-test as described by Siegel[4] and Weil[5] to judge significant differences.

d. Litter Size and Pup Body Weights

The mean numbers of liveborn pups per litter and mean body weights of pups were analyzed by one-way analysis of variance and Bartlett's test for homogeneity of variances. Treatment groups were compared to the control group using the appropriate t-statistic (for equal or unequal variances) as described by Steel and Torrie[1] and Ostle[2]. Significant differences were determined using Dunnett's[3] multiple comparison tables.

B. RESULTS

The results of the data analyses are discussed in the appropriate sections of the report.

R. John Weaver, M.S.
Director of Statistics

12-17-84
Date

C. REFERENCES

1. Steel, R. G. D. and Torrie, J. H. (1960). Principles and Procedures of Statistics. McGraw-Hill, New York, NY.

2. Oscle, B. (1954), Statistics in Research, Iowa State College Press, Ames, Iowa.

3. Dunnett, C. W. (1964). New tables for multiple comparisons with a control. Biometrics, 20: 482-491.

4. Siegel, S. (1956). Nonparametric Statistics for the Behavioral Sciences. McGraw-Hill, New York, NY.

5. Weil, C. S. (1970). Selection of the valid number of sampling units and a consideration of their combination in toxicological studies involving reproduction, teratogenesis or carcinogenesis. Food Cosmet. Toxicol., 8: 177-182.

VI. IN-LIFE PHASE

A. METHODS

1. Experimental Design

a. Animal Receipt and Environmental Conditions

Eighty-one male and 160 female 42-day old Charles River COBS® CD® rats were received from The Charles River Breeding Laboratories, Inc., Portage, Michigan on October 5, 1982. Upon receipt, the animals were assigned temporary animal numbers and housed individually in suspended wire-mesh cages.

During the 14-day acclimation period, the rats were provided with basal laboratory diet of ground Purina® Certified Rodent Chow® #5002 (each diet lot used was recorded) and tap water available ad libitum and carefully observed for changes in appearance and behavior. Throughout the study, all animals were housed in environmentally controlled rooms. Temperature ranged between 21 and 24°C. Generally, humidity was within 50 ± 15%, however, protocol humidity requirements were exceeded five times during the course of the study. Fluorescent lighting provided illumination 12 hours per day. Rats were housed individually in suspended wire-mesh cages except during mating (when rats were cohabitated), gestation and lactation when females were housed in plastic breeding cages with wood shaving bedding. Feeder jars were changed and sanitized once weekly.

Rats were identified by cage, group and individually by a Monel® metal ear tag. The individual animal number plus the IRDC study number comprised a unique identification number for each animal.

b. Organization of Test Groups

Animals exhibiting physical abnormalities were discarded prior to randomization. At study initiation, animals were randomly assigned (see Section V.A.1) to one control and three treatment groups consisting of 15 males and 30 females each to become the F_0 parents.

The study schematic is presented in Figure 1.

Figure 1. Study Schematic

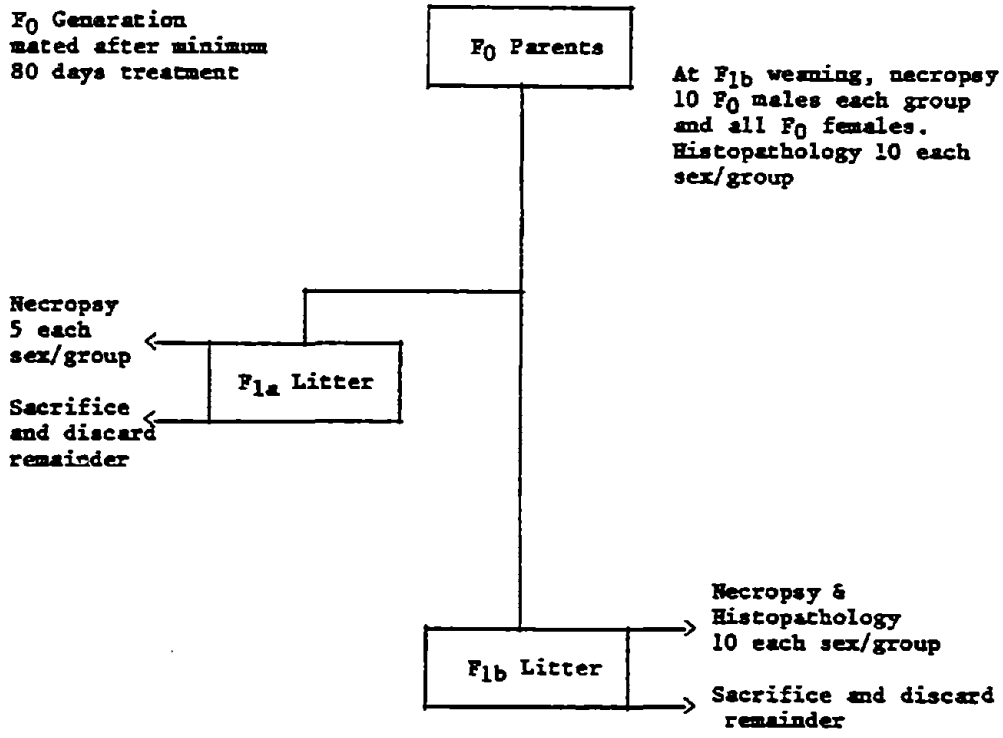

401-189

2. General Observations

a. General Appearance, Behavior and Mortality

The parental rats and pups were observed twice each day for signs of overt toxicity, changes in general appearance and behavior, and mortality. Detailed observations were recorded weekly on the parental rats. On study week 6, detailed observations were inadvertently not recorded for all animals. Examination of pups for gross deformities was conducted at birth and on days 4, 7, 14 and 21 of lactation.

b. Body Weights

Individual body weights were recorded weekly for the adult rats. In addition, females were weighed on days 0, 7, 13 and 20 of gestation and days 0, 7, 14 and 21 of lactation for all matings. Pups were individually weighed on days 0, 4, 7, 14 and 21 of lactation.

c. Food Consumption

Parental food consumption was measured weekly for individual rats except during mating. Food consumption was not measured during mating as the males and females were cohabitated during this time period.

d. Estrous Cycle Determinations

Ten days prior to initiation of each mating period, the F_0 females were smeared daily to establish estrous cycles. Smearing continued until evidence of mating was determined or until the mating period ended.

e. Reproductive and Litter Parameters

Specific reproductive observations included tabulation of male and female fertility indices and the length of gestation. Any abnormalities in nesting and nursing behavior and difficulties at parturition were recorded. Litter parameters assessed included mean number of live and stillborn pups per litter (litter size), pup survival to weaning, pup weight at birth and specified intervals (see Section VI.A.2.b.) during lactation and general appearance and behavior.

3. Specific Breeding and Maintenance Schedule

a. First Generation - First Breeding (F_{1a} Offspring)

After a minimum of 80 days of treatment (136 days of age), the F_0 parental rats were mated to produce the F_{1a} offspring as follows: Initially, the F_0 animals were individually housed in suspended wire-mesh cages. Each male was cohabitated with two females from the same treatment group and this mating set was placed in a plastic cage with wood shaving bedding for a period of 10 days. The females were examined daily for evidence of copulation by means of vaginal smears and/or the appearance of a vaginal plug. The day evidence of copulation was established was designated as gestation day 0 and the female was transferred to an individual plastic cage containing nesting material (wood shaving bedding). Any females failing to exhibit evidence of mating after the initial 10-day mating period were remated with a different male (sperm positive during initial 10 days) selected from the same treatment group for a five-day period. The maximum mating period was 15 days. After the mating period, males were returned to individual suspended wire-mesh cages and maintained on treatment. Females for which no evidence of copulation was detected after the 15-day mating period were individually housed in plastic cages with wood shaving bedding. A record of mating performance was maintained and both male and female fertility indices were tabulated.

Toward the end of the gestation period, females were examined twice daily for signs of parturition. The bred females were allowed to give birth (F_{1a}). The length of gestation was calculated and any difficulties occurring at delivery were recorded. The day on which all pups had been delivered was designated day 0 of lactation. The litters were examined as soon as possible after delivery for litter size, stillbirths, live births and any gross abnormalities. Litter

size was reduced to 10 pups, of equal sex distribution whenever possible, on lactation day 4 by use of a random numbers table. The culled pups were examined externally and discarded. Litters were caged with their mothers for three weeks after birth. Dams and pups were observed daily for survival and behavioral abnormalities in nesting and nursing; the presence of dead pups was recorded. Intact dead pups were necropsied, examined for anomalies and discarded. Dams and pups were weighed during gestation and/or lactation as previously described. The number of pups per sex was recorded on day 21 of lactation. At weaning, 5 male and 5 female F_{1a} pups randomly selected from each group were sacrificed and necropsied. An additional female pup (six total) from the 0.005 mg/kg/day group was inadvertently sacrificed and necropsied. All other F_{1a} pups were sacrificed and discarded after a gross external examination at weaning.

b. First Generation - Second Breeding (F_{1b} Offspring)

Because of the reduced fertility observed in all groups, the study was extended for production of a second litter (F_{1b}) by the F_0 parents. All F_0 males and females remained on study and continued on treatment after the F_{1a} pups were weaned.

The F_0 females were rested for a minimum of 10 days after completion of the initial 21-day lactation period and then bred a second time with a different male in the same treatment group to produce the F_{1b} litters. The rats had been treated for a minimum of 132 days prior to the F_{1b} mating. Methodology and observations during mating, gestation and lactation were identical to those utilized for the F_{1a} mating.

At the completion of the F_{1b} 21-day lactation period, all dams and 10 male/10 female F_{1b} pups randomly selected from each group were sacrificed and necropsied. Uterine implantation sites of the dams were recorded. All other pups were examined externally, sacrificed and discarded. Also, 10 randomly selected F_0 males from each group and

those females that did not deliver litters were sacrificed and necropsied. Uteri were stained with ammonium sulfide solution for detection of implantations[2]. The remaining F_0 males were externally examined, sacrificed and discarded.

B. RESULTS

1. General Appearance, Behavior and Survival

a. F_0 Parental Rats

Mortality of F_0 parental rats is illustrated in Figure 2.

Figure 2. F_0 Parental Mortality
Elemental Phosphorus mg/kg/day

	0	0.005	0.015	0.075
Males	1/15	2/15[a]	0/15	0/15
Females	4/30	1/30	1/30	15/30

[a]Value includes one male sacrificed in extremis

Upon necropsy, evidence of technical error in gavaging was indicated as the cause of death in two animals, one female (17952) in the control group and one male (17964) in the 0.005 mg/kg/day treatment group. There was no evidence of intubation error among the remaining F_0 parents that died on study.

One death occurred among the F_0 males in the control group during week 16. Although the animal (17927) exhibited no visible abnormalities prior to death, the cause of death was attributed to cystitis. One F_0 male (17972) in the 0.005 mg/kg/day dosage group was sacrificed in extremis during week 8. Prior to sacrifice, this rat displayed clinical signs that included gasping, loss of righting reflex, hypothermia, and moribundity. Necropsy observations consisted of yellow-to-white lesions on the kidneys, white fluid in the kidneys and enlarged kidneys.

Mortality among F_0 females first occurred during week 14. The majority of F_0 females that died on study displayed no visible

abnormalities prior to death. The predominant clinical sign observed was hair loss on both forelimbs, primarily confined to the 0.075 mg/kg/day treatment group, and was considered a result of nesting behavior. However, at the 0.075 mg/kg/day treatment level, seven females in the F_{1a} and six females in the F_{1b} matings died on gestation days 21 or 22; this may have resulted from difficulties in parturition.

Postmortem examination revealed that one F_0 female in the high-dose group (18094) died due to a rupture of the uterine wall during delivery. With the exception of this and the previously mentioned control female that died of gavage injury, the cause of death could not be determined for the remainder of F_0 females that died on study.

The majority of animals that survived to study termination exhibited no visible abnormalities. The most frequently noted clinical sign was hair loss, which was observed primarily among females. As previously stated, this was considered a result of nesting behavior. Misaligned upper incisors with or without a corresponding dry material around the eyes was observed in a few animals in each group but this is a common observation in this species and not considered treatment related.

There were no meaningful differences in necropsy observations between control group rats and those in the treatment groups that survived to study termination. Necropsy observations consisted primarily of no gross lesions, with a few isolated incidents of renal pelvic dilation, tan foci on the liver and enlarged uterus.

2. Parental Body Weights (Tables 2-5, Appendices C and D)

Weekly group mean body weight values for males in the high dose group were generally comparable to the control group values during the first half of the generation but were very slightly decreased during the second half. Low- and mid-dose male weekly values were slightly to moderately less than those of the control throughout the generation.

There was no clear dose-relationship in the pattern of body weight inhibition among F_0 males. The F_0 female mean weekly body weight values of the treated groups did not differ meaningfully from those of the control throughout the generation.

There were no meaningful differences in group mean maternal body weight changes between the control group values and those of the treatment groups during the F_{1a} and F_{1b} overall gestation periods. Group mean maternal body weights of the treatment groups were comparable to those of the control group throughout both the F_{1a} and F_{1b} lactation interval. Slight losses in group mean maternal body weight were occasionally observed in the control and all treatment groups during the F_{1a} and F_{1b} lactation periods, but these are common in this species during lactation and were not considered meaningful.

3. Food Consumption (Tables 6, 7)

The mean food intake values (g/animal/day and g/kg/day) of treated parents of both sexes were comparable to those of the control throughout the study.

4. Reproductive Parameters (Tables 8 and 9, Appendices B, E, F and G)

a. Fertility

Male and female fertility indices were comparable to the control group values at all treatment levels in the F_{1a} and F_{1b} matings. Evaluation of daily estrous examinations prior to and during the F_{1a} and F_{1b} matings did not indicate a treatment effect. Occasional irregularities (primarily prolonged estrous and post-estrous) were observed at roughly similar frequencies in the treated and control groups.

b. Parturition and Length of Gestation

There were no significant differences in the mean length of gestation between the treatment group females and those in the control group in the F_{1a} and F_{1b} matings. At the high-dose level, seven F_{1a} and

six F_{1b} dams died during the period of expected parturition (days 21 or 22 of gestation). This finding was considered indicative of treatment-induced dystocia. There was no evidence of parturition difficulties in females in the control, 0.005 or 0.015 mg/kg/day groups.

5. Litter Parameters (Tables 8 and 9, Appendices E and G)

a. Pup Viability (birth)

Slight reductions in the mean number of viable pups at birth in the F_{1a} litters were observed at the 0.075 mg/kg/day level; there was a concurrent increase in the mean number of stillborn pups. Also the pup survival index at lactation day 0 for the 0.075 mg/kg/day dosage group was reduced when compared to the control group value.

Similar findings were noted in the mean numbers of viable and stillborn pups at 0.075 mg/kg/day in F_{1b} litters, but not at similar magnitudes as the F_{1a} litter values. Survival index values for the 0.075 mg/kg/day in F_{1b} litters were comparable to those of the control.

There were no biologically or statistically significant differences between the 0.005 or 0.015 mg/kg/day treated rats and the control rats in the mean number of viable or stillborn pups on lactation day 0 in the F_{1a} and F_{1b} litters.

b. Pup Survival to Weaning

Treatment with elemental phosphorus at levels of 0.005, 0.015 and 0.075 mg/kg/day had no apparent effect on pup survival to weaning in the F_{1a} or F_{1b} litters. Three F_{1b} litters were sacrificed after the death of their dams during the lactation period. The sacrificed pups were excluded from the survival indices.

c. Pup Weight at Birth

The mean pup weight at birth of treated litters in both matings of the F_0 generation was statistically comparable to that of the control group.

d. Pup Weights During Lactation

Pup body weights during lactation were unaffected by treatment with elemental phosphorus at dosage levels of 0.005, 0.015 and 0.075 mg/kg/day in both matings of the F_0 generation.

e. Offspring Assessment

There were no physical or behavioral abnormalities associated with treatment with elemental phosphorus observed in pups at the 0.005, 0.015 or 0.075 mg/kg/day levels when compared to control pups. In the F_{1a} litters, 47 pups died and were necropsied; seven, nine, fourteen and seventeen in the control, 0.005, 0.015 and 0.075 mg/kg/day groups, respectively. Anomalies were observed in two control group pups (one male, one female) at necropsy. The female displayed mandibular micrognathia; one centrally located, larger than normal, naris opening; oral opening absent, one facial papillae absent, pinna placed more ventral than normal; microphthalmia of the left eye and a cleft palate. The male pup exhibited a right-sided aortic arch, the pulmonary trunk was more narrow than normal, the ductus arteriosus emptied into the left subclavian, a vestigial vessel was retroesophageal (arose from the descending aorta and entered the area where the ductus arteriosus emptied into the left subclavian) and an interventricular septal defect. Also, all lobes of the lungs were reversed with two lobes present on the right side and three lobes present on the left side.

Variations present in F_{1a} pups that died consisted of Grade 0 kidney (agenesis of the renal papillae) in one female in the 0.005 mg/kg/day group. Necropsy findings observed in the remainder of dead F_{1a} pups were primarily indicative of postmortem autolytic changes.

Sixteen F_{1a} pups, four, six, four and two in the control, low-, mid- and high-dose groups, respectively, were either missing and presumed completely cannibalized, or partially cannibalized and discarded without necropsy.

The appearance and behavior of F_{1b} pups at 0.005, 0.015 and 0.075 mg/kg/day was also comparable to that of the control group pups. In the F_{1b} litters, 31 pups died and were necropsied; three, eight, eleven and nine in the control, 0.005, 0.015 and 0.075 mg/kg/day groups, respectively.

Malformations were observed in one male pup from the 0.015 mg/kg/day group. The abnormalities consisted of mandibular micrognathia (short lower jaw), microstomia, three facial papillae absent, both pinnae located more ventral and posterior than normal and cleft palate.

Variations and pathological findings consisted of Grade 0 kidneys in one male pup in the control group, and one male pup in the 0.075 mg/kg/day group exhibited a pericardium filled with dark red clotted material and fluid, and a large tear and red clotted material on the left atrium. All other dead pups in the F_{1b} litters were determined to be normal or had normal autolytic changes.

Three litters, one in the control group and two in the 0.075 mg/kg/day group, were examined and discarded following the death of their dams. Each of these litters consisted of 10 pups each. Of these 30 pups, all were normal except one male from one of the 0.075 mg/kg/day litters. This male pup displayed hydronephrosis which was considered a pathological finding.

Twelve F_{1b} pups, four, four, two and two in the control, low-, mid- and high-dose groups, respectively, were either missing and presumed completely cannibalized, or partially cannibalized and discarded without necropsy being performed.

C. REFERENCES

1. Li, J.C.R. (1964). Statistical Inference I. Edwards Brothers, Inc. Ann Arbor, MI pp. 589-597.

2. Kopf, R., Lorenz, D., and Salewski, E. (1964). The effect of thalidomide on the fertility of rats studied in two generations. Naunyn Schmiedebergs Arch. Pharmacol, 247: 121-135.

VII. PATHOLOGY

A. METHODS

1. Macroscopic

Complete postmortem examinations, under the direct supervision of a pathologist, were performed for 10 F_0 parental males per group, all F_0 parental females, all F_0 females which did not deliver litters, 10 F_{1b} pups per sex per group, 5 F_{1a} pups per sex per group (except Group 2 female which had six) and all died on study and sacrificed *in extremis* animals. All survivors and all animals sacrificed *in extremis* were euthanized by carbon dioxide asphyxiation.

After a thorough external examination, each animal was opened and the contents of the abdominal, thoracic and cranial cavities were examined both *in situ* and after removal and dissection. All macroscopic abnormalities were recorded on the Pathology Record sheet.

Representative samples of protocol designated tissues were collected and placed in phosphate-buffered neutral formalin. Tissues were collected from 10 F_0 parents per sex per group, 10 F_{1b} pups per sex per group and gross lesions from all died on study and sacrificed *in extremis* animals. The following tissues were collected:

- Adrenal (2)
- Aorta (abdominal)
- Bone (femur)
- Bone marrow (femur)
- Brain (2 levels)
- Esophagus
- Eye (2) (including optic nerve and Harderian gland, right)
- Heart
- Ileum
- Jejunum
- Cecum
- Rectum
- Colon
- Mammary gland (inguinal)
- Nerve (sciatic)
- Ovary (2)
- Pancreas
- Pituitary
- Prostate/seminal vesicle (2)
- Salivary gland
- Skeletal muscle (biceps femoris, right)
- Skin (inguinal, taken with mammary gland)
- Spleen
- Spinal cord (cervical)
- Stomach
- Testis (with epididymis) (2)

- Duodenum
- Kidney (2)
- Liver (sections from at least 2 lobes)
- Lung (with mainstem bronchi) (2)
- Lymph nodes (mesenteric)
- Thymus
- Thyroid (with parathyroid)
- Trachea
- Urinary bladder
- Uterus (corpus with cervix uteri)
- Gross lesions

2. Microscopic

Representative samples of protocol designated tissues were processed for the preparation and microscopic examination of hematoxylin-and-eosin-stained paraffin sections. A full tissue complement was prepared for 10 F_0 parents per sex from the high-dose and control groups, 10 F_{1b} pups per sex from the high-dose and control groups and gross lesions from animals which died on study or were sacrificed in extremis. A four-step grading system of trace, mild, moderate, and severe was used to define gradable lesions for comparison between dosage groups. A complete listing of tissue accountability can be found in the Tissue Inventory (Appendix J).

The following list constitutes the full complement of tissues:

- Adrenal (2)
- Bone
- Brain
- Heart
- Kidney (2)
- Liver
- Lung (with mainstem bronchi)
- Ovary (2)
- Prostate/seminal vesicle (2)
- Stomach
- Testis (with epididymis) (2)
- Uterus (corpus with cervix uteri)
- Gross lesions

B. Results

1. Macroscopic (Tables 10-15, Appendix I)

There were no compound-related changes observed during postmortem examination of animals from the F_0, F_{1a} or F_{1b} generations. All changes observed were considered incidental and unrelated to the compound.

2. Microscopic (Tables 16-19, Appendices I and J)

There were no compound-related changes observed during microscopic examination of tissues from animals in the F_0 or F_{1b} generations. All changes observed were considered incidental and unrelated to the administration of the compound.

Microscopic tissue examinations were performed by Linda C. Uraih, D.V.M., M.S. Dr. Uraih is no longer employed at IRDC.

Report Reviewed By: Ward R Richter 1-15-85
Ward R. Richter, D.V.M., A.C.V.P. Date
Director, Pathology Division

VIII. SIGNATURES

Prepared By: Jacqueline M. Lang — 12/27/84
Jacqueline M. Lang, B.S. — Date
Report Writer
Reproduction and Teratology

Reviewed By: James L. Schardein — 12/27/84
James L. Schardein, M.S. — Date
Assistant Director of Toxicology Division, and Director of Reproduction and Teratology

Malcolm Blair — 12/27/84
Malcolm Blair, Ph.D. — Date
Director of Toxicology Division

TABLE 2. MALES: Group Mean Body Weight, Standard Deviation and Survival

	Elemental Phosphorus (mg/kg/day)											
	0 (Control)			0.005			0.015			0.075		
Study Week	Mean Body Weight (g)	± S.D.	Survival	Mean Body Weight (g)	± S.D.	Survival	Mean Body Weight (g)	± S.D.	Survival	Mean Body Weight (g)	± S.D.	Survival
0	268	10.2	15/15	264	6.4	15/15	264	9.1	15/15	268	8.7	15/15
1	307	16.5	15/15	299	12.3	15/15	301	11.0	15/15	307	16.6	15/15
2	340	21.4	15/15	331	17.5	15/15	332	13.3	15/15	339	20.8	15/15
3	368	26.1	15/15	357	22.0	15/15	356	21.4	15/15	366	22.9	15/15
4	393	30.2	15/15	376	27.3	15/15	379	21.7	15/15	389	25.9	15/15
5	413	34.0	15/15	396	25.8	15/15	398	27.7	15/15	412	30.7	15/15
6	438	39.6	15/15	419	30.6	15/15	419	33.2	15/15	437	32.4	15/15
7	449	43.3	15/15	435	34.7	15/15	431	34.9	15/15	451	33.2	15/15
8	472	47.3	15/15	452	37.0	14/15	449	37.4	15/15	471	36.8	15/15
9	486	50.7	15/15	466	40.3	14/15	461	38.7	15/15	483	40.3	15/15
10	497	54.1	15/15	474	40.2	14/15	472	44.5	15/15	495	42.8	15/15
11	513	56.1	15/15	487	43.9	14/15	480	42.2	15/15	503	44.6	15/15
12	498	64.8	15/15	478	45.8	14/15	473	41.5	15/15	495	45.5	15/15
13	513	60.7	15/15	490	45.2	14/15	484	41.3	15/15	503	44.4	15/15
14	527	59.9	15/15	504	47.1	14/15	496	42.5	15/15	512	45.4	15/15
15	537	62.4	15/15	511	50.4	14/15	508	44.9	15/15	525	47.5	15/15
16	556	66.4	14/15	525	52.1	14/15	517	47.4	15/15	538	49.0	15/15
17	563	72.5	14/15	522	29.4	13/15	530	52.6	15/15	549	53.1	15/15
18	568	75.4	14/15	527	30.1	13/15	538	53.5	15/15	556	54.0	15/15
19	574	74.5	14/15	533	31.1	13/15	545	54.8	15/15	559	54.1	15/15
20	581	76.1	14/15	538	33.8	13/15	553	56.1	15/15	563	55.4	15/15
21	589	77.1	14/15	542	33.3	13/15	562	56.0	15/15	568	54.9	15/15
22	579	78.1	14/15	532	33.4	13/15	552	58.6	15/15	560	54.4	15/15
23	585	78.1	14/15	541	35.2	13/15	556	59.1	15/15	565	54.0	15/15
24	592	79.4	14/15	547	35.6	13/15	563	58.3	15/15	571	55.8	15/15
25	600	79.9	14/15	553	36.5	13/15	571	58.0	15/15	586	59.7	15/15
26	611	81.1	14/15	561	35.5	13/15	578	58.4	15/15	585	57.8	15/15
27	617	85.4	14/15	569	37.0	13/15	589	61.7	15/15	592	59.5	15/15
28	626	85.8	14/15	574	40.1	13/15	595	60.8	15/15	600	60.6	15/15
29	634	88.5	14/15	582	43.5	13/15	604	62.4	15/15	607	62.1	15/15
30	636	90.6	14/15	581	48.6	13/15	610	65.1	15/15	613	63.1	15/15

401-189

Values from the treated groups, specified to be tested in the report, did not differ significantly from the control group, $p>0.05$
S.D. - Standard deviation

TABLE 3. FEMALES: Group Mean Body Weight, Standard Deviation and Survival

	Elemental Phosphorus (mg/kg/day)											
	0 (Control)			0.005			0.015			0.075		
Study Week	Mean Body Weight (g)	± S.D.	Survival	Mean Body Weight (g)	± S.D.	Survival	Mean Body Weight (g)	± S.D.	Survival	Mean Body Weight (g)	± S.D.	Survival
0	177	7.5	30/30	176	5.5	30/30	178	6.9	30/30	176	6.8	30/30
1	201	10.6	30/30	197	7.4	30/30	201	7.1	30/30	197	9.3	30/30
2	215	14.5	30/30	210	9.4	30/30	213	9.1	30/30	210	11.8	30/30
3	225	16.1	30/30	221	10.4	30/30	225	12.8	30/30	220	13.7	30/30
4	235	17.6	30/30	231	11.8	30/30	233	13.7	30/30	230	14.1	30/30
5	245	17.8	30/30	239	14.5	30/30	242	14.5	30/30	238	15.8	30/30
6	252	21.2	30/30	245	14.2	30/30	248	14.9	30/30	245	16.9	30/30
7	256	22.0	30/30	248	13.0	30/30	252	17.2	30/30	247	17.5	30/30
8	266	23.2	30/30	256	15.5	30/30	259	18.2	30/30	254	16.7	30/30
9	271	23.4	30/30	262	16.7	30/30	264	18.4	30/30	260	18.1	30/30
10	275	24.3	30/30	267	16.5	30/30	270	18.5	30/30	267	18.9	30/30
11	281	26.2	30/30	270	18.0	30/30	272	19.6	30/30	270	20.1	30/30
12	285	26.0	30/30	276	20.8	30/30	276	20.2	30/30	273	19.3	30/30
13	299	28.5	30/30	290	21.0	30/30	291	19.9	30/30	287	20.9	30/30
14	319	35.1	29/30	313	27.5	30/30	307	26.2	30/30	306	22.2	30/30
15	322	45.4	29/30	325	42.5	30/30	331	49.4	30/30	321	45.4	27/30
16	318	35.3	29/30	309	28.6	30/30	307	23.7	29/30	301	21.4	23/30
17	311	28.2	29/30	309	24.9	30/30	310	21.1	29/30	311	25.0	23/30
18	307	25.8	29/30	303	21.1	30/30	305	20.8	29/30	304	21.6	23/30
19	295	25.2	29/30	287	18.3	30/30	295	21.8	29/30	291	24.0	23/30
20	297	26.0	29/30	288	16.7	30/30	292	20.8	29/30	293	23.5	23/30
21	299	27.1	29/30	290	17.2	30/30	292	21.7	29/30	296	24.6	23/30
22	307	28.9	28/30	296	18.6	29/30	300	20.5	29/30	305	25.7	23/30
23	323	30.4	28/30	310	21.7	29/30	312	22.5	29/30	321	27.2	22/30
24	357	41.8	28/30	337	41.1	29/30	337	36.4	29/30	357	38.9	22/30
25	333	40.6	27/30	323	32.8	29/30	331	39.0	29/30	331	28.0	17/30
26	336	34.7	27/30	328	29.3	29/30	333	36.6	29/30	332	17.9	16/30
27	314	40.3	26/30	312	29.5	29/30	319	29.8	29/30	324	20.9	14/30
28	317	45.8	10/30[a]	304	19.7	13/30[a]	325	34.1	15/30[a]	327	12.6	6/30[a]
29	315	27.5	7/30[a]	311	20.8	10/30[a]	321	42.4	10/30[a]	334	15.8	5/30[a]
30	315	29.4	7/30	308	23.9	10/30	321	49.1	9/30[a]	336	17.3	5/30

Values from the treated groups, specified to be tested in the report, did not differ significantly from the control group, $p>0.05$.

S.D. - Standard deviation

[a]Survival decrease due to scheduled sacrifice after F_{1b} weaning

401-189

TABLE 4. Summary of Group Mean Maternal Body Weights and Body Weight Changes During Gestation and Lactation (F_{1a})

Day of Gestation	Group Mean Maternal Body Weights (grams) Elemental Phosphorus (mg/kg/day) 0 (Control) Mean	± S.D.	0.005 Mean	± S.D.	0.015 Mean	± S.D.	0.075 Mean	± S.D.
0	275	19.9	271	20.7	269	16.1	264	17.5
7	296	21.4	292	18.9	289	14.8	282	18.5
13	317	24.6	312	19.6	307	15.9	302	20.2
20	378	41.5	370	28.5	373	36.7	364	25.5
Day of Lactation								
0	310	19.7	302	26.6	298	18.3	292	21.3
7	315	19.1	314	19.1	312	17.6	302	21.8
14	327	26.1	314	16.5	320	15.0	314	19.9
21	315	19.8	312	19.3	311	14.4	303	20.3
Days of Gestation	Group Mean Maternal Body Weight Change (grams)[a]							
0 to 7	21	6.5	21	7.5	20	7.4	18	6.7
7 to 13	19	7.5	20	4.8	17	6.4	19	3.8
13 to 20	61	24.6	58	15.3	66	27.6	63	12.1
0 to 20	101	29.9	100	19.0	104	32.0	100	15.7
Days of Lactation								
0 to 7	6	12.5	12	14.5	15	10.5	10	14.4
7 to 14	12	25.8	0	10.4	7	8.4	12	12.1
14 to 21	-13	24.7	-2	12.2	-9	13.0	-10	13.2
0 to 21	5	17.1	10	18.6	13	15.8	12	15.2

[a]Values represent the mean of the individual changes in maternal body weight for these intervals

S.D. - Standard deviation

TABLE 5. Summary of Group Mean Maternal Body Weights and Body Weight Changes During Gestation and Lactation (F_{1b})

	Group Mean Maternal Body Weights (grams)							
	Elemental Phosphorus (mg/kg/day)							
	0 (Control)		0.005		0.015		0.075	
Day of Gestation	Mean	± S.D.	Mean	± S.D.	Mean	± S.D.	Mean	± S.D.
0	297	29.7	290	16.9	294	16.8	292	25.4
7	315	30.7	308	18.8	310	14.7	313	27.0
13	334	31.4	324	19.7	327	15.8	330	28.8
20	404	29.1	386	30.1	392	26.0	398	34.7
Day of Lactation								
0	327	31.5	326	28.1	330	22.5	336	27.7
7	341	32.2	333	20.5	336	14.2	335	22.3
14	338	31.8	338	26.7	335	17.3	341	17.0
21	322	31.2	320	25.0	325	15.4	325	16.9
Days of Gestation	Group Mean Maternal Body Weight Change (grams)[a]							
0 to 7	18	6.9	17	7.7	16	7.1	21	6.2
7 to 13	19	6.3	16	7.5	17	4.4	17	5.1
13 to 20	71	15.4	62	19.2	65	17.6	68	15.2
0 to 20	107	21.1	95	22.1	99	23.2	105	17.8
Days of Lactation								
0 to 7	15	13.3	6	13.2	7	16.0	-1	14.4
7 to 14	-3	12.1	6	12.8	-1	10.0	6	9.0
14 to 21	-15	20.7	-19	15.9	-11	13.3	-16	10.4
0 to 21	-4	18.1	-7	18.3	-6	17.6	-10	18.6

[a]Values represent the mean of the individual changes in maternal body weight for these intervals

S.D. - Standard deviation

401-189

TABLE 6. MALES: Group Mean Food Consumption (with Standard Deviation)

	Elemental Phosphorus (mg/kg/day)											
	0 (Control)			0.005			0.015			0.075		
Study Week	g/ animal/ day	± S.D.	g/ kg/ day	g/ animal/ day	± S.D.	g/ kg/ day	g/ animal/ day	± S.D.	g/ kg/ day	g/ animal/ day	± S.D.	g/ kg/ day
1	23.1	1.84	75.3	22.2	2.08	74.2	22.1	1.41	73.4	21.9	2.12	71.4
2	22.6	2.02	66.6	21.8	2.02	65.9	21.5	1.20	64.9	22.1	2.30	65.3
3	22.5	2.31	61.0	21.3	2.18	59.7	21.3	3.48	59.9	21.5	1.90	58.7
4	22.3	2.59	56.7	20.9	3.02	55.6	21.7	1.63	57.3	20.5	3.98	52.6
5	22.6	3.19	54.7	21.3	2.93	53.9	21.4	2.06	53.8	22.5	3.16	54.6
6	22.5	2.47	51.3	21.3	2.70	50.8	21.0	2.36	50.1	21.0	2.48	48.1
7	22.1	2.47	49.3	21.9	2.90	50.3	20.8	1.94	48.4	21.2	3.64	47.1
8	21.4	2.52	45.4	21.3	2.74	47.3	21.1	1.69	47.0	21.2	2.03	45.0
9	21.4	2.49	44.1	20.8	2.59	44.6	20.5	1.85	44.5	20.5	2.10	42.4
10	21.0	2.57	42.3	20.2	2.60	43.2	20.2	1.98	42.7	20.0	2.29	40.4
11	20.3	2.37	39.6	20.0	2.83	41.0	19.4	2.79	40.5	19.6	1.99	39.0
12[a]	20.5	6.01	41.2	21.5	3.16	45.0	20.8	1.55	44.1	20.9	2.94	42.2
13[b]												
14[a]	17.8	1.72	33.7	16.4	3.96	32.5	16.0	1.16	32.3	15.2	1.67	29.7
15	19.8	2.40	36.9	19.4	2.91	37.9	19.3	2.33	38.0	19.1	2.02	36.3
16	20.4	2.16	36.7	19.9	2.80	38.0	18.9	2.12	36.6	19.1	1.98	35.5
17	19.0	3.66	33.7	19.0	1.76	36.4	19.0	2.58	35.8	18.3	2.40	33.3
18	19.5	2.69	34.3	19.0	1.50	36.0	19.4	2.19	36.1	18.6	2.08	33.4
19	18.7	2.43	32.6	18.6	1.74	35.0	18.8	1.77	34.5	17.6	1.92	31.5
20	17.3	3.45	29.7	17.2	1.64	32.0	18.6	1.62	33.5	17.3	1.56	30.7
21[c]	19.3	2.13	32.8	18.6	1.64	34.2	19.0	2.18	33.8	17.8	1.45	31.3
22[b]												
23[b]												
24[d]	18.1	3.52	30.6	18.4	6.78	33.7	15.7	1.92	27.9	16.5	3.63	29.0
25	17.9	2.42	29.8	16.8	3.13	30.4	16.5	1.71	28.8	16.8	2.52	28.8
26	19.5	3.40	31.9	18.7	4.45	33.4	17.0	2.29	29.5	16.8	3.27	28.6
27	19.0	3.62	30.8	18.8	1.36	33.0	18.2	2.09	31.1	17.0	2.43	28.7
28	16.6	2.34	26.6	15.9	1.64	27.7	16.6	1.95	27.8	15.5	1.93	25.8
29	17.5	1.92	27.6	16.6	1.86	28.6	17.1	1.37	28.3	15.9	1.51	26.2
30[a]	17.0	1.92	26.7	16.0	2.52	27.5	16.7	1.33	27.3	16.4	3.81	26.8

[a]3-day food consumption
[b]Food consumption not recorded during mating interval
[c]8-day food consumption
[d]5-day food consumption

S.D. - Standard deviation

TABLE 7. FEMALES: Group Mean Food Consumption (with Standard Deviation)

Elemental Phosphorus (mg/kg/day)

Study Week	0 (Control) g/ animal/ day	± S.D.	g/ kg/ day	0.005 g/ animal/ day	± S.D.	g/ kg/ day	0.015 g/ animal/ day	± S.D.	g/ kg/ day	0.075 g/ animal/ day	± S.D.	g/ kg/ day
1	16.5	1.38	82.3	16.5	1.11	83.8	16.3	1.12	80.9	16.1	1.16	81.7
2	16.3	1.65	75.9	16.0	1.47	76.4	16.0	1.13	75.3	16.0	1.48	76.2
3	15.8	1.76	70.2	16.1	1.19	73.0	15.4	3.09	68.4	15.8	1.23	71.8
4	16.1	2.08	68.7	16.7	2.83	72.4	15.7	1.25	67.4	15.7	1.05	68.3
5	15.9	2.15	64.8	15.8	1.36	66.0	15.5	1.32	64.2	15.0	1.46	63.2
6	15.0	1.85	59.4	15.1	0.97	61.7	15.0	1.43	60.5	14.8	1.25	60.6
7	15.8	1.55	61.7	15.7	1.34	63.3	14.8	2.23	58.5	14.3	1.84	58.0
8	14.9	1.63	56.0	14.8	1.45	58.0	14.5	1.25	56.1	14.2	1.28	55.8
9	14.7	1.44	54.1	15.4	1.18	58.8	14.9	1.38	56.3	14.6	1.11	56.1
10	14.8	1.54	54.0	15.3	1.32	57.2	14.9	1.32	55.2	14.9	1.38	55.6
11	14.5	1.57	51.8	14.7	1.36	54.3	14.5	1.46	53.3	14.4	2.58	53.2
12[a]	14.9	1.90	52.1	15.1	1.37	54.7	14.5	1.62	52.5	14.8	1.86	54.1
13[b]												
14[a]	14.3	2.66	45.0	14.1	2.74	45.0	13.6	2.35	44.2	14.7	2.04	48.1
15	14.7	3.04	45.8	15.5	3.35	47.6	15.2	2.68	45.9	14.9	2.93	46.3
16	20.1	9.57	63.1	21.3	8.28	69.0	18.9	7.42	61.0	18.9	7.63	62.8
17	25.0	15.09	80.4	30.2	13.19	97.8	29.2	1.41	94.1	29.3	14.86	94.1
18	33.7	19.59	109.7	39.2	18.12	129.4	36.2	21.49	118.8	33.7	19.14	111.0
19	21.3	14.64	72.3	25.1	14.47	87.5	25.6	15.68	86.9	19.0	9.29	65.4
20	13.5	2.44	45.5	15.1	4.86	52.4	13.9	4.54	47.4	13.7	2.56	46.6
21[c]	13.4	2.18	44.8	13.6	2.13	46.9	13.1	1.74	44.9	13.6	1.67	46.1
22[b]												
23[b]												
24[d]	16.4	3.01	46.0	15.0	3.01	44.6	14.8	2.27	44.0	15.8	3.72	44.2
25	17.1	3.59	51.5	16.9	3.97	52.4	16.0	3.44	48.2	16.6	3.63	50.2
26	29.4	13.19	87.6	26.6	12.90	81.1	24.5	11.29	73.6	24.3	10.80	73.0
27	35.2	16.64	112.0	31.5	15.97	101.0	31.7	15.93	99.2	27.9	14.53	86.0
28	17.2	13.26	54.3	15.6	12.12	51.2	26.6	18.60	81.8	11.1	1.39	33.9
29	11.5	1.64	36.5	11.5	1.35	37.1	17.5	11.40	54.5	12.8	2.10	38.4
30[a]	12.2	1.25	38.6	11.5	2.27	37.2	12.6	1.37	39.3	12.8	1.81	38.2

[a]3-day food consumption

[b]Food consumption not recorded during mating interval

[c]8-day food consumption

[d]5-day food consumption

S.D. - Standard deviation

TABLE 8. F_{1a} Summary of Gestation and Lactation Data

Test Article, Dosage Level, mg/kg/day	Female Fertility Index: Gravid Females / Total Females Mated	%	Male Fertility Index: Fertile Males / Total Males	%	Copulatory/Mating Index: No. of Females with Evidence of Copulation / Total Females Mated	%	Pup Survival Index (Lactation Days) 0: No. Live Pups at Day 0 / Total Born	%	4: No. Live Pups at Day 4 BR / No. Live Pups at Day 0	%	7: No. Live Pups at Day 7 / No. Live Pups at Day 4 AR	%	14: No. Live Pups at Day 14 / No. Live Pups at Day 7	%	21: No. Live Pups at Day 21 / No. Live Pups at Day 14	%
Elemental Phosphorus:																
0 (Control):	18/30	60.0	11/15	73.3	28/30	93.3	199/206	96.6	197/199	99.0	151/152	99.3	150/151	99.3	150/150	100.0
0.005:	23/30	76.7	13/15	86.7	29/30	96.7	236/244	96.7	231/236	97.9	202/203	99.5	201/202	99.5	201/201	100.0
0.015:	19/30	63.3	12/15	80.0	28/30	93.3	244/247	98.8	234/244	95.9	178/178[a]	100.0	178/178	100.0	178/178	100.0
0.075:	21/30	70.0	15/15	100.0	25/30	83.3	126/145	86.9	126/126	100.0	113/113	100.0	113/113	100.0	113/113	100.0

	Mean Gestation Length (Days ± S.D.)		Mean No. Dead Pups at Day 0 (Days ± S.D.)		Mean No. Live Pups at Day 0 (± S.D.)		Group Mean Body Weight (grams) of Live Pups During Lactation (Lactation Days) 0: Mean ± S.D.		4 BR: Mean ± S.D.		4 AR: Mean ± S.D.		7: Mean ± S.D.		14: Mean ± S.D.		21 Male: Mean ± S.D.		21 Female: Mean ± S.D.	
0 (Control):	22.1	0.35	0.4	1.00	11.7	4.48	6.1	0.58	9.9	1.40	9.9	1.42	15.4	1.53	29.3	3.18	44.7	5.44	42.8	5.26
0.005:	22.5	0.51	0.3	0.65	10.3	3.49	6.4	0.62	10.9	1.55	10.8	1.59	16.4	1.90	29.7	2.94	44.5	5.29	43.8	5.14
0.015:	22.3	0.45	0.2	0.37	12.8	2.03	6.1	0.49	10.0	1.42	10.0	1.41	15.2	1.36	28.5	2.33	43.8	3.91	42.6	4.07
0.075:	22.4	0.50	1.4	2.53	9.0	3.42	6.3	0.51	10.7	1.27	10.7	1.29	15.9	1.98	30.6	3.27	47.8	6.07	45.7	4.31

Values from the treated groups, specified to be tested in the report, did not differ significantly from the control group, $p>0.05$

BR - Before Reduction

AR - After Reduction

S.D. - Standard Deviation

[a]Value does not include the two pups sacrificed or the five pups found dead in litter #18049, due to death of dam.

TABLE 9. F_{1b} Summary of Gestation and Lactation Data

Test Article, Dosage Level, mg/kg/day	Female Fertility Index: Gravid Females / Total Mated	Female Fertility Index: Gravid Females / Total Mated: %	Male Fertility Index: Fertile Males / Total Mated	Male Fertility Index: Fertile Males / Total Mated: %	Copulatory/Mating Index: No. of Females with Evidence of Copulation / Total Mated	Copulatory/Mating Index: No. of Females with Evidence of Copulation / Total Mated: %	Pup Survival Index (Lactation Days) 0: No. Live Pups at Day 0 / Total Born	0: %	4: No. Live Pups at Day 4 BR / No. Live Pups at Day 0	4: %	7: No. Live Pups at Day 7 / No. Live Pups at Day 4 AR	7: %	14: No. Live Pups at Day 14 / No. Live Pups at Day 7	14: %	21: No. Live Pups at Day 21 / No. Live Pups at Day 14	21: %
Elemental Phosphorus:																
0 (Control):	21/28	75.0	12/14	85.7	28/28	100.0	220/225	97.8	218/220	99.1	184/184	100.0	184/184	100.0	174/174[b]	100.0
0.005:	19/29[a]	65.5	12/13	92.3	27/30	90.0	191/199	96.0	188/191	98.4	155/156	99.4	155/155	100.0	155/155	100.0
0.015:	20/29	69.0	14/15	93.3	27/29	93.1	201/211	95.3	199/201	99.0	176/176	100.0	176/176	100.0	175/176	99.4
0.075:	17/22[a]	77.3	11/14	78.6	22/23	95.7	105/114	92.1	104/105	99.0	93/ 93	100.0	92/ 93	98.9	72/ 72[b]	100.0

Test Article, Dosage Level, mg/kg/day	Mean Gestation Length (Days ± S.D.)		Mean No. Dead Pups at Day 0 (Days ± S.D.)		Mean No. Live Pups at Day 0 (± S.D.)		Group Mean Body Weight (grams) of Live Pups During Lactation (Lactation Days) 0: Mean ± S.D.	0:	4 BR: Mean ± S.D.	4 BR:	4 AR: Mean ± S.D.	4 AR:	7: Mean ± S.D.	7:	14: Mean ± S.D.	14:	21: Male Mean ± S.D.	21: Male:	21: Female Mean ± S.D.	21: Female:
0 (Control):	22.3	0.57	0.3	0.44	11.0	2.81	6.3	0.55	10.6	1.43	10.6	1.46	16.1	1.88	30.6	2.54	47.7	4.42	45.1	4.07
0.005:	22.1	0.68	0.4	1.02	10.1	4.26	6.3	0.66	10.6	1.91	10.7	1.89	16.3	2.61	30.7	4.95	48.8	8.20	46.1	7.52
0.015:	22.1	0.51	0.5	0.69	10.1	3.03	6.2	0.55	10.7	1.17	10.6	1.19	16.3	1.28	30.8	2.06	48.3	2.64	46.6	3.14
0.075:	22.0	0.63	0.8	1.17	9.5	3.50	6.1	0.65	10.3	1.52	10.3	1.52	15.5	2.45	29.0	4.35	45.0	5.92	44.6	6.47

Values from the treated groups, specified to be tested in the report, did not differ significantly from the control group, $p>0.05$

[a] Dams #17983 (0.005 mg/kg/day) and #18067 (0.075 mg/kg/day) died on gestation days 1 and 5, respectively. Pregnancy status could not be determined for either female, therefore they were not included in the female fertility calculations for their respective groups.

[b] Value does not include pups sacrificed due to death of dam(s)

BR - Before Reduction

AR - After Reduction

S.D. - Standard Deviation

TABLE 10.

INCIDENCE OF MACROSCOPIC OBSERVATIONS
DEATHS AND UNSCHEDULED SACRIFICES, TERMINAL SACRIFICE, F_0 GENERATION, MALES

	0 mg/kg/day		0.005 mg/kg/day		0.015 mg/kg/day		0.075 mg/kg/day	
	DOS	TS	DOS	TS	DOS	TS	DOS	TS
NUMBER OF ANIMALS EXAMINED	1	10	1	10	0	10	0	10
NUMBER WITHIN NORMAL LIMITS	0	7	0	9	0	7	0	9
ABDOMINAL CAVITY								
- Mass, mesentery, firm, red, encapsulated		1						
- Adhesions, multifocal, mild				1				
ESOPHAGUS								
- Proximal, perforation, focal, moderate			1					
HEART								
- White foci, mild						1		
KIDNEY								
- Hydronephrosis/pelvis dilatation/white fluid, unilateral/bilateral, trace/mild	1	1	1	1				
- Enlarged, unilateral, trace			1					
- Yellow/white lesions, surface, pinpoint - 7 mm diameter multiple, bilateral			1					
LIVER								
- Tan focus, multifocal, trace		1				1		
- Reticulated, moderate								1
MESENTERIC FAT								
- Stained red			1					
MUSCLE								
- Thorax, necrotic, multifocal, unilateral, moderate			1					
PROSTATE								
- Firm, moderate	1							
SPLEEN								
- Cysts, clear, multifocal, trace						1		
STOMACH, GLANDULAR								
- Hemorrhage, focal, mild			1					
THORACIC CAVITY								
- Contains oily serosanguineous fluid, severe			1					
URINARY BLADDER								
- Mucosa/wall, hemorrhage/vascular, focal, moderate	1							
- Contains dark red fluid			1					

DOS - Deaths and Unscheduled Sacrifices
TS - Terminal Sacrifice

TABLE 11.

INCIDENCE OF MACROSCOPIC OBSERVATIONS
DEATHS AND UNSCHEDULED SACRIFICES, TERMINAL SACRIFICE, F_0 GENERATION, FEMALES

	0 mg/kg/day		0.005 mg/kg/day		0.015 mg/kg/day		0.075 mg/kg/day	
	DOS	TS	DOS	TS	DOS	TS	DOS	TS
NUMBER OF ANIMALS EXAMINED	4	26	1	29	1	29	16	14
NUMBER WITHIN NORMAL LIMITS	1	22	0	26	0	27	10	12
ABDOMINAL CAVITY								
- Hemoperitoneum/two free fetus, mild							1	
DUODENUM								
- Mucosa, congestion, mild					1			
HEART								
- Pale, mild							1	
- Hole, atria	1							
KIDNEY								
- Hydronephrosis/pelvis dilatation, unilateral/bilateral, mild/moderate	1	1		1		1		1
- Congestion, corticomedullary junction, bilateral, moderate							1	
- Hemorrhagic medulla, bilateral, severe							1	
LIVER								
- Pale, mild	1							
LUNG								
- Red foci, mild		1						
- Congestion, scattered/diffuse, mild/moderate			1				4	
- Clotted black material	1							
OVARY								
- Cyst, clear, unilateral, mild						1		
SKIN/SUBCUTIS								
- Swollen, external ear/hindlimb, tarsus joint, unilateral/bilateral, trace/mild		1		1				
- Hair loss, mild								1

DOS - Deaths and Unscheduled Sacrifices
TS - Terminal Sacrifice

401-189

TABLE 11. Cont.

INCIDENCE OF MACROSCOPIC OBSERVATIONS
DEATHS AND UNSCHEDULED SACRIFICES, TERMINAL SACRIFICE, F_0 GENERATION, FEMALES

	0 mg/kg/day		0.005 mg/kg/day		0.015 mg/kg/day		0.075 mg/kg/day	
	DOS	TS	DOS	TS	DOS	TS	DOS	TS
STOMACH, NOS								
- Black foci, moderate							1	
STOMACH, GLANDULAR								
- Red focus/foci, scattered, trace/mild	1				1		1	
TRACHEA								
- Rupture, gavage injury	1							
THORACIC CAVITY								
- Hemothorax/red fluid, NOS/severe	2							
- Hemorrhagic, mediastinum, severe	1							
THYMUS								
- Red foci, moderate	1							
UTERUS								
- Intrauterine hemorrhage, moderate							1	
- Rupture, mild							1	
- Enlarged, mild/moderate		1		1				
- Yellow fluid, moderate				1				

DOS - Deaths and Unscheduled Sacrifices
TS - Terminal Sacrifice

TABLE 12.

INCIDENCE OF MACROSCOPIC OBSERVATIONS
TERMINAL SACRIFICE, F_{1a} GENERATION, PUPS, MALES

	0 mg/kg/day	0.005 mg/kg/day	0.015 mg/kg/day	0.075 mg/kg/day
NUMBER OF ANIMALS EXAMINED	5	5	5	5
NUMBER WITHIN NORMAL LIMITS	5	5	4	4
LUNG				
- Red, firm, bilateral, mild			1	
- Hemorrhage, multifocal, bilateral, mild				1

TABLE 13.

INCIDENCE OF MACROSCOPIC OBSERVATIONS
TERMINAL SACRIFICE, F_{1a} GENERATION, PUPS, FEMALES

	0 mg/kg/day	0.005 mg/kg/day	0.015 mg/kg/day	0.075 mg/kg/day
NUMBER OF ANIMALS EXAMINED	5	6	5	5
NUMBER WITHIN NORMAL LIMITS	2	5	5	5
EYE				
- Enlarged, unilateral, moderate		1		
- Internal hemorrhage, unilateral, mild		1		
LUNG				
- Hemorrhage, focal/multifocal, -trace	2	1		
-mild	1			

TABLE 14.

INCIDENCE OF MACROSCOPIC OBSERVATIONS
TERMINAL SACRIFICE, F_{1b} GENERATION, PUPS, MALES

	0 mg/kg/day	0.005 mg/kg/day	0.015 mg/kg/day	0.075 mg/kg/day
NUMBER OF ANIMALS EXAMINED	10	10	10	10
NUMBER WITHIN NORMAL LIMITS	9	10	10	10
KIDNEY				
- Dilatation, pelvic, bilateral, trace	1			

TABLE 15.

INCIDENCE OF MACROSCOPIC OBSERVATIONS
TERMINAL SACRIFICE, F_{1b} GENERATION, PUPS, FEMALES

	0 mg/kg/day	0.005 mg/kg/day	0.015 mg/kg/day	0.075 mg/kg/day
NUMBER OF ANIMALS EXAMINED	10	10	10	10
NUMBER WITHIN NORMAL LIMITS	10	10	9	10
KIDNEY				
- Hydronephrosis, unilateral, mild			1	

Abbreviations Utilized on the Incidence of Microscopic Observations

DOS - Deaths and Unscheduled Sacrifices
SAC - Scheduled Sacrifice
Tis. - Tissue

TABLE 16.

INCIDENCE OF MICROSCOPIC OBSERVATIONS
0 - Termination: Rats
MALE

TISSUE OBSERVATION		0 mg/kg/day DOS	0 mg/kg/day SAC	0.005 mg/kg/day DOS	0.005 mg/kg/day SAC	0.015 mg/kg/day DOS	0.015 mg/kg/day SAC	0.075 mg/kg/day DOS	0.075 mg/kg/day SAC
Adrenal, cortex		(0)	(10)	(0)	(0)	(0)	(0)	(0)	(9)
Vacuolar change,		0	4	0	0	0	0	0	0
	-trace	0	3	0	0	0	0	0	0
	-mild	0	1	0	0	0	0	0	0
Within normal limits		0	6	0	0	0	0	0	9
Adrenal, medulla		(0)	(10)	(0)	(0)	(0)	(0)	(0)	(9)
Within normal limits		0	10	0	0	0	0	0	9
Bone		(0)	(10)	(0)	(0)	(0)	(0)	(0)	(10)
Within normal limits		0	10	0	0	0	0	0	9
Increased osteoclastic activity, mild		0	0	0	0	0	0	0	1
Brain		(0)	(10)	(0)	(0)	(0)	(0)	(0)	(10)
Within normal limits		0	10	0	0	0	0	0	10
Epididymis		(0)	(10)	(0)	(0)	(0)	(0)	(0)	(10)
Within normal limits		0	10	0	0	0	0	0	10
Esophagus		(0)	(0)	(1)	(0)	(0)	(0)	(0)	(0)
Inflammation, moderate		0	0	1	0	0	0	0	0
Heart		(0)	(10)	(0)	(0)	(0)	(0)	(0)	(10)
Inflammation,		0	1	0	0	0	0	0	4
	-trace	0	1	0	0	0	0	0	0
	-mild	0	0	0	0	0	0	0	4
Lymphocytic infiltration, trace		0	3	0	0	0	0	0	0
Within normal limits		0	6	0	0	0	0	0	6

CODE: () = NUMBER OF ANIMALS EXAMINED

TABLE 16. Cont.

INCIDENCE OF MICROSCOPIC OBSERVATIONS
0 - Termination: Rats
MALE

TISSUE OBSERVATION		0 mg/kg/day DOS	0 mg/kg/day SAC	0.005 mg/kg/day DOS	0.005 mg/kg/day SAC	0.015 mg/kg/day DOS	0.015 mg/kg/day SAC	0.075 mg/kg/day DOS	0.075 mg/kg/day SAC
Kidney		(1)	(10)	(1)	(0)	(0)	(0)	(0)	(10)
Microconcretion, moderate		1	0	0	0	0	0	0	0
Hydronephrosis, trace		0	1	0	0	0	0	0	0
Inflammation, mild		0	0	0	0	0	0	0	1
Medial calcification, moderate		1	0	0	0	0	0	0	0
Tubular degeneration, mild		1	0	0	0	0	0	0	0
Abscess, severe		0	0	1	0	0	0	0	0
Chronic progressive nephropathy,		0	4	0	0	0	0	0	1
	-trace	0	3	0	0	0	0	0	0
	-mild	0	1	0	0	0	0	0	1
Within normal limits		0	6	0	0	0	0	0	8
Liver		(0)	(10)	(0)	(0)	(0)	(0)	(0)	(10)
Hematopoiesis, extramedullary, trace		0	0	0	0	0	0	0	1
Glycogen deposition, increased,		0	6	0	0	0	0	0	7
	-trace	0	4	0	0	0	0	0	1
	-mild	0	2	0	0	0	0	0	4
	-moderate	0	0	0	0	0	0	0	2
Inflammation, trace		0	1	0	0	0	0	0	0
Within normal limits		0	4	0	0	0	0	0	3
Lung		(0)	(10)	(0)	(0)	(0)	(0)	(0)	(10)
Inflammation,		0	4	0	0	0	0	0	1
	-trace	0	1	0	0	0	0	0	0
	-mild	0	3	0	0	0	0	0	0
	-moderate	0	0	0	0	0	0	0	1
Medial calcification, trace		0	0	0	0	0	0	0	1
Peribronchial lymphoid infiltration,		0	4	0	0	0	0	0	1
	-trace	0	1	0	0	0	0	0	0
	-mild	0	3	0	0	0	0	0	1
Perivascular lymphoid infiltration, mild		0	0	0	0	0	0	0	1
Within normal limits		0	3	0	0	0	0	0	6

401-189FO CODE: () = NUMBER OF ANIMALS EXAMINED

TABLE 16. Cont.

INCIDENCE OF MICROSCOPIC OBSERVATIONS
0 - Termination: Rats
MALE

TISSUE OBSERVATION	0 mg/kg/day DOS	0 mg/kg/day SAC	0.005 mg/kg/day DOS	0.005 mg/kg/day SAC	0.015 mg/kg/day DOS	0.015 mg/kg/day SAC	0.075 mg/kg/day DOS	0.075 mg/kg/day SAC
Prostate	(1)	(10)	(0)	(0)	(0)	(0)	(0)	(10)
Inflammation, severe	1	0	0	0	0	0	0	0
Within normal limits	0	10	0	0	0	0	0	10
Seminal Vesicle	(1)	(10)	(0)	(0)	(0)	(0)	(0)	(10)
Inflammation, severe	1	0	0	0	0	0	0	0
Within normal limits	0	10	0	0	0	0	0	10
Soft Tis., Abdomen	(0)	(1)	(0)	(0)	(0)	(0)	(0)	(0)
Hemorrhage, mild	0	1	0	0	0	0	0	0
Inflammation, mild	0	1	0	0	0	0	0	0
Soft Tis., Thorax	(0)	(0)	(1)	(0)	(0)	(0)	(0)	(0)
Inflammation, severe	0	0	1	0	0	0	0	0
Stomach-Glandular	(0)	(10)	(1)	(0)	(0)	(0)	(0)	(10)
Within normal limits	0	10	1	0	0	0	0	10
Stomach-Nonglandular	(0)	(10)	(0)	(0)	(0)	(0)	(0)	(10)
Within normal limits	0	10	0	0	0	0	0	10
Testis	(0)	(10)	(0)	(0)	(0)	(0)	(0)	(10)
Within normal limits	0	10	0	0	0	0	0	10
Urinary Bladder	(1)	(0)	(0)	(0)	(0)	(0)	(0)	(0)
Inflammation, ulcerative, moderate	1	0	0	0	0	0	0	0

401-189FO CODE: ( ) = NUMBER OF ANIMALS EXAMINED

TABLE 17.

INCIDENCE OF MICROSCOPIC OBSERVATIONS
3 - Termination: Rats
FEMALE

TISSUE OBSERVATION	0 mg/kg/day DOS	0 mg/kg/day SAC	0.005 mg/kg/day DOS	0.005 mg/kg/day SAC	0.015 mg/kg/day DOS	0.015 mg/kg/day SAC	0.075 mg/kg/day DOS	0.075 mg/kg/day SAC
Adrenal, cortex	(0)	(10)	(0)	(0)	(0)	(0)	(0)	(10)
Within normal limits	0	10	0	0	0	0	0	10
Adrenal, medulla	(0)	(10)	(0)	(0)	(0)	(0)	(0)	(10)
Within normal limits	0	10	0	0	0	0	0	10
Bone	(0)	(10)	(0)	(0)	(0)	(0)	(0)	(10)
Within normal limits	0	10	0	0	0	0	0	10
Brain	(0)	(10)	(0)	(0)	(0)	(0)	(0)	(10)
Within normal limits	0	10	0	0	0	0	0	10
Duodenum	(0)	(0)	(0)	(0)	(1)	(0)	(0)	(0)
Congestion, trace	0	0	0	0	1	0	0	0
Thrombosis, mild	0	0	0	0	1	0	0	0
Heart	(0)	(10)	(0)	(0)	(0)	(0)	(1)	(10)
Inflammation, moderate	0	0	0	0	0	0	1	0
Necrosis, mild	0	0	0	0	0	0	1	0
Thrombosis, atrial, mild	0	0	0	0	0	0	1	0
Within normal limits	0	10	0	0	0	0	0	10

CODE: () = NUMBER OF ANIMALS EXAMINED

TABLE 17. Cont.

INCIDENCE OF MICROSCOPIC OBSERVATIONS
0 - Termination: Rats
FEMALE

TISSUE OBSERVATION		0 mg/kg/day DOS	0 mg/kg/day SAC	0.005 mg/kg/day DOS	0.005 mg/kg/day SAC	0.015 mg/kg/day DOS	0.015 mg/kg/day SAC	0.075 mg/kg/day DOS	0.075 mg/kg/day SAC
Kidney		(1)	(10)	(0)	(0)	(0)	(0)	(2)	(10)
Microconcretion, mild		0	0	0	0	0	0	0	1
Congestion, moderate		0	0	0	0	0	0	1	0
Hydronephrosis, trace		1	0	0	0	0	0	0	0
Inflammation, mild		0	1	0	0	0	0	0	0
Chronic progressive nephropathy,		1	0	0	0	0	0	0	6
	-trace	1	0	0	0	0	0	0	4
	-mild	0	0	0	0	0	0	0	2
Within normal limits		0	9	0	0	0	0	1	4
Liver		(1)	(10)	(0)	(0)	(0)	(0)	(0)	(10)
Glycogen deposition, increased, trace		0	0	0	0	0	0	0	1
Lymphocytic infiltration, trace		0	0	0	0	0	0	0	1
Within normal limits		1	10	0	0	0	0	0	8
Lung		(0)	(10)	(1)	(0)	(0)	(0)	(4)	(10)
Congestion,		0	0	0	0	0	0	3	0
	-trace	0	0	0	0	0	0	1	0
	-mild	0	0	0	0	0	0	2	0
Hemorrhage, moderate		0	0	1	0	0	0	0	0
Inflammation,		0	3	0	0	0	0	0	3
	-trace	0	2	0	0	0	0	0	2
	-mild	0	1	0	0	0	0	0	1
Peribronchial lymphoid infiltration,		0	2	0	0	0	0	2	4
	-trace	0	1	0	0	0	0	0	2
	-mild	0	1	0	0	0	0	2	2
Within normal limits		0	5	0	0	0	0	1	5
Ovary		(0)	(10)	(0)	(0)	(0)	(0)	(0)	(10)
Within normal limits		0	10	0	0	0	0	0	10
Skin		(0)	(0)	(0)	(0)	(0)	(0)	(0)	(1)
Within normal limits		0	0	0	0	0	0	0	1

CODE: ( ) = NUMBER OF ANIMALS EXAMINED

TABLE 17. Cont.

INCIDENCE OF MICROSCOPIC OBSERVATIONS
0 - Termination: Rats
FEMALE

TISSUE OBSERVATION	0 mg/kg/day DOS	0 mg/kg/day SAC	0.005 mg/kg/day DOS	0.005 mg/kg/day SAC	0.015 mg/kg/day DOS	0.015 mg/kg/day SAC	0.075 mg/kg/day DOS	0.075 mg/kg/day SAC
Soft Tis., Thorax	(1)	(0)	(0)	(0)	(0)	(0)	(0)	(0)
Hemorrhage, moderate	1	0	0	0	0	0	0	0
Stomach-Glandular	(1)	(10)	(0)	(0)	(0)	(0)	(2)	(10)
Ulcer,	0	0	0	0	0	0	2	0
-trace	0	0	0	0	0	0	1	0
-mild	0	0	0	0	0	0	1	0
Within normal limits	1	10	0	0	0	0	0	10
Stomach-Nonglandular	(0)	(10)	(0)	(0)	(1)	(0)	(0)	(10)
Ulcer, mild	0	0	0	0	1	0	0	0
Within normal limits	0	10	0	0	0	0	0	10
Thymus	(1)	(0)	(0)	(0)	(0)	(0)	(0)	(0)
Hemorrhage, moderate	1	0	0	0	0	0	0	0
Trachea	(1)	(0)	(0)	(0)	(0)	(0)	(0)	(0)
Within normal limits	1	0	0	0	0	0	0	0

401-189FO CODE: () = NUMBER OF ANIMALS EXAMINED

TABLE 17. Cont.

INCIDENCE OF MICROSCOPIC OBSERVATIONS
0 - Termination: Rats
FEMALE

TISSUE OBSERVATION		0 mg/kg/day DOS	0 mg/kg/day SAC	0.005 mg/kg/day DOS	0.005 mg/kg/day SAC	0.015 mg/kg/day DOS	0.015 mg/kg/day SAC	0.075 mg/kg/day DOS	0.075 mg/kg/day SAC
Uterus		(0)	(10)	(0)	(0)	(0)	(0)	(2)	(10)
Congestion, moderate		0	0	0	0	0	0	1	0
Edema, mild		0	0	0	0	0	0	1	0
Fibrosis, mild		0	3	0	0	0	0	0	5
Inflammation,		0	0	0	0	0	0	2	0
	-mild	0	0	0	0	0	0	1	0
	-moderate	0	0	0	0	0	0	1	0
Pigment, brown,		0	4	0	0	0	0	0	4
	-trace	0	1	0	0	0	0	0	2
	-mild	0	3	0	0	0	0	0	2
Thrombosis, mild		0	1	0	0	0	0	0	0
Within normal limits		0	4	0	0	0	0	0	1
Uterus, cervix		(0)	(10)	(0)	(0)	(0)	(0)	(0)	(10)
Fibrosis, trace		0	0	0	0	0	0	0	1
Within normal limits		0	10	0	0	0	0	0	9

CODE: () = NUMBER OF ANIMALS EXAMINED

TABLE 18.

INCIDENCE OF MICROSCOPIC OBSERVATIONS
0 - Termination: Rats
MALE

TISSUE OBSERVATION	0 mg/kg/day	0.005 mg/kg/day	0.015 mg/kg/day	0.075 mg/kg/day
Adrenal, cortex	(10)	(0)	(0)	(10)
Within normal limits	10	0	0	10
Adrenal, medulla	(10)	(0)	(0)	(10)
Within normal limits	10	0	0	10
Bone	(10)	(0)	(0)	(10)
Within normal limits	10	0	0	10
Brain	(10)	(0)	(0)	(10)
Within normal limits	10	0	0	10
Epididymis	(10)	(0)	(0)	(10)
Within normal limits	10	0	0	10
Heart	(10)	(0)	(0)	(10)
Within normal limits	10	0	0	10
Kidney	(10)	(0)	(0)	(10)
Cyst, trace	1	0	0	0
Within normal limits	9	0	0	10
Liver	(10)	(0)	(0)	(10)
Within normal limits	10	0	0	10
Lung	(10)	(0)	(0)	(10)
Within normal limits	10	0	0	10
Prostate	(10)	(0)	(0)	(9)
Within normal limits	10	0	0	9

401-189F1B CODE: () = NUMBER OF ANIMALS EXAMINED INCLUDING DIED ON STUDY ANIMALS IF ANY

TABLE 18. Cont.

INCIDENCE OF MICROSCOPIC OBSERVATIONS
0 - Termination: Rats
MALE

TISSUE OBSERVATION	0 mg/kg/day	0.005 mg/kg/day	0.015 mg/kg/day	0.075 mg/kg/day
Seminal Vesicle	(10)	(0)	(0)	(9)
Within normal limits	10	0	0	9
Stomach-Glandular	(10)	(0)	(0)	(10)
Within normal limits	10	0	0	10
Stomach-Nonglandular	(10)	(0)	(0)	(10)
Within normal limits	10	0	0	10
Testis	(10)	(0)	(0)	(10)
Within normal limits	10	0	0	10

401-189F1B CODE: ( ) = NUMBER OF ANIMALS EXAMINED INCLUDING DIED ON STUDY ANIMALS IF ANY

TABLE 19.

INCIDENCE OF MICROSCOPIC OBSERVATIONS
0 - Termination: Rats
FEMALE

TISSUE OBSERVATION	0 mg/kg/day	0.005 mg/kg/day	0.015 mg/kg/day	0.075 mg/kg/day
Adrenal, cortex	(10)	(0)	(0)	(10)
Within normal limits	10	0	0	10
Adrenal, medulla	(10)	(0)	(0)	(10)
Within normal limits	10	0	0	10
Bone	(10)	(0)	(0)	(10)
Within normal limits	10	0	0	10
Brain	(10)	(0)	(0)	(10)
Within normal limits	10	0	0	10
Heart	(10)	(0)	(0)	(10)
Within normal limits	10	0	0	10
Kidney	(10)	(0)	(0)	(10)
Cyst, trace	1	0	0	0
Within normal limits	9	0	0	10
Liver	(10)	(0)	(0)	(10)
Glycogen deposition, increased, mild	1	0	0	0
Within normal limits	9	0	0	10
Lung	(10)	(0)	(0)	(10)
Within normal limits	10	0	0	10
Ovary	(9)	(0)	(0)	(10)
Within normal limits	9	0	0	10
Stomach-Glandular	(10)	(0)	(0)	(10)
Within normal limits	10	0	0	10

401-189F18 CODE: ( ) = NUMBER OF ANIMALS EXAMINED INCLUDING DIED ON STUDY ANIMALS IF ANY

TABLE 19. Cont.

INCIDENCE OF MICROSCOPIC OBSERVATIONS
0 - Termination: Rats
FEMALE

TISSUE OBSERVATION	0 mg/kg/day	0.005 mg/kg/day	0.015 mg/kg/day	0.075 mg/kg/day
Stomach-Nonglandular	(10)	(0)	(0)	(10)
Within normal limits	10	0	0	10
Uterus	(10)	(0)	(0)	(10)
Within normal limits	10	0	0	10
Uterus, cervix	(10)	(0)	(0)	(9)
Within normal limits	10	0	0	9

401-189F1B CODE: () = NUMBER OF ANIMALS EXAMINED INCLUDING DIED ON STUDY ANIMALS IF ANY

123

APPENDIX A

Quality Assurance Inspections

134

Quality Assurance Inspections

Dates of Inspections	Dates of Reports to Management	Dates of Reports to Study Director
10/04/82	3/11/83	3/11/83
10/19/82	4/28/83	4/28/83
10/26/82	5/13/83	5/13/83
10/29/82	6/07/83	6/07/83
11/23/82	6/15/83	6/15/83
12/28/82	6/28/83	9/06/83
1/07/83	9/06/83	10/31/83
1/10/83	10/31/83	11/30/83
1/18/83	11/04/83	3/26/84
1/25/83	11/30/83	1/14/85
2/01/83	3/26/84	
3/01/83	1/14/85	
3/09/83		
3/15/83		
3/16/83		
3/17/83		
3/31/83		
4/01/83		
4/08/83		
4/28/83		
6/15/83		
6/23/83		
6/27/83		
7/12/83		
10/31/83		
11/04/83		
11/30/83		
3/26/84		
1/14/85		
1/21/85		

135

APPENDIX B
Daily Estrous Cycle Observations

Daily Estrous Cycle Observations (F_{1a})

Dosage Level, Female Number	Premating Days										
	0	1	2	3	4	5	6	7	8	9	10
0 mg/kg/day (Control):											
17932	E	Di	Di	Di	E	Di	Di	Di	E	Di	Di
17933	Di	E	Post	Di	Di	Di	Pro	E	Di	Di	Di
17934	E	Di	Di	Di	E	Di	Di	Di	E	Di	Di
17935	Di	Di	Pro	Post	Di	Di	Di	E	Di	Di	Di
17936	Di	Di	E	Di	Di	Di	E	Di	Di	Di	E
17937	Di	E	Di	Di	Di	E	Di	Di	Di	E	Post
17938	E	Di	Di	Di	E	Di	Di	Di	E	Di	Di
17939	Di	Di	E	Di	Di	Di	E	Di	Di	Di	E
17940	Di	Di	Pro	E	Di	Di	Di	E	Di	Di	Di
17941	Di	Di	Pro	E	Di	Di	Di	E	Di	Di	Di
17942	Di	Di	Pro	E	Di	Di	Di	E	Di	Di	Pro
17943	Di	Di	Pro	E	Di	Di	Di	E	Di	Di	Di
17944	Di	Di	Post	Di	Di	Di	E	E	Di	Di	Di
17945	Di	Di	Pro	Post	Di	Di	Di	E	Post	Post	Post
17946	Di	Di	Pro	Post	Di	Di	Di	E	Di	Di	Di
17947	Di	E	E	Di	Di	Di	E	Di	Di	Di	E
17948	Di	E	Di	Di	Di	E	Di	Di	Di	E	Di
17949	Di	Di	Di	E	Di	Di	Di	E	Di	Di	Di
17950	Di	Di	Pro	E	Di	Di	Di	E	Di	Di	Pro
17951	Pro	E	Di	Di	Di	E	Di	Di	Pro	E	Di
17952	Di	Di	Pro	E	Di	Di	Di	E	Di	Di	Di
17953	Di	Di	Di	E	Di	Di	Di	E	Di	Di	Di
17954	Di	Di	Di	E	Di	Di	Di	E	Di	Di	Pro
17955	Di	E	Di	Di	Di	E	Di	Di	Pro	E	Di
17956	Di	Di	Di	E	Di	Di	Di	E	Di	Di	Pro
17957	Di	Di	Pro	E	Post	Di	Di	Di	E	Post	Di
17958	E	Post	Post	Post	Post	Post	Post	Post	Post	Post	Post
17959	Di	Post	Post	Post	Post	Di	Di	Post	Post	Post	Post
17960	E	Di	Di	Di	Di	Di	Di	Di	E	E	Di
17961	E	Di	Di	Di	E	Di	Di	Di	E	Di	Di

Di - Diestrus E - Estrus
Pro - Proestrus Post - Postestrus

Daily Estrous Cycle Observations, (F_{1a})

Dosage Level, Female Number	Mating Days										Remating Days				
	1	2	3	4	5	6	7	8	9	10	1	2	3	4	5
0 mg/kg/day (Control):															
17932	Di	S													
17933	E	S													
17934	Pro	P													
17935	S														
17936	Post	Di	Di	S											
17937	Di	Di	Di	Pro	E	Di	Di	Di	Di	S					
17938	Pro	S													
17939	Di	Di	Pro	S											
17940	S														
17941	S														
17942	S														
17943	S														
17944	E	Post	Di	Di	Di	E	P								
17945	Post	Post	Post	Post	S										
17946	S														
17947	Di	Di	Di	S											
17948	Di	Pro	E	Di	Di	Di	S								
17949	S														
17950	S														
17951	Di	Pro	E	Di	Di	Pro	E	S							
17952	S														
17953	E	Di	Di	Di	Pro	E	Di	Di	Di	Di	Di	Di	Di	Di	Di
17954	S														
17955	Di	Pro	S												
17956	E	Di	Di	Di	E	Di	Di	Di	S						
17957	Di	Di	E	E	S										
17958	Post	Post	Post	Post	Post	Post	Post	Post	Post	Post	Post	Post	Post	Post	Post
17959	Post	Post	Post	Post	Post	Post	Di	Di	Di	S					
17960	Di	Di	Pro	P											
17961	Pro	E	Di	Di	Di	E	Di	Di	Di	S					

Di - Diestrus
E - Estrus
Pro - Proestrus
Post - Postestrus
P - Copulatory plug observed
S - Sperm observed

Daily Estrous Cycle Observations (F_{1a})

Test Article, Dosage Level, Female Number	Premating Days 0	1	2	3	4	5	6	7	8	9	10
Elemental Phosphorus 0.005 mg/kg/day:											
17977	E	Di	Di	Di	E	Di	Di	Di	E	Di	Di
17978	E	Post	Di	Di	Di	E	Di	Di	Pro	E	Di
17979	Di	E	Di	Di	Di	E	Di	Di	Di	E	Di
17980	Di	Pro	Post	Di	Di	Di	E	Di	Di	Di	E
17981	Di	E	E	Post	Di	Di	Di	E	Di	Di	Di
17982	Di	E	Di	Di	Di	E	Post	Post	Post	Post	Post
17983	Di	Di	Pro	E	Di	Di	Pro	E	Di	Di	Pro
17984	E	E	Post	Di	Di	Di	Pro	E	Post	Post	Post
17985	E	Di	Di	Di	Pro	Post	Di	Di	Di	Pro	Post
17986	Di	Di	Di	E	Di	Di	Di	E	Di	Di	Di
17987	Di	Di	E	Di	Di	Di	E	Di	Di	Di	E
17988	E	Di	Di	Di	E	Di	Di	Di	E	Di	Di
17989	E	Di	Di	Di	E	Di	Di	Di	E	Di	Di
17990	Di	Di	Pro	E	Di	Di	Di	E	Di	Di	Di
17991	Di	Di	E	Di	Di	Di	E	Di	Di	Di	E
17992	Di	E	Di	Di	Di	E	Di	Di	Pro	E	Di
17993	Di	Di	E	Di	Di	Di	E	Di	Di	Di	E
17994	Pro	E	Post	Di	Di	Di	Pro	E	Post	Post	Post
17995	Di	Di	E	Di	Di	Di	E	Di	Di	Di	E
17996	Di	E	Di	Di	Di	E	Di	Di	Di	E	Di
17997	Di	Di	Pro	E	Di	Di	Di	E	Di	Di	Di
17998	Di	Di	Pro	Post	Di	Di	Di	E	Di	Di	Di
17999	Di	Pro	E	Post	Post	Di	Di	Di	Di	Di	Di
18000	Di	Di	Di	E	Di	Di	Di	E	Di	Di	Di
18001	Di	Pro	E	Di	Di	Di	E	Di	Di	Pro	E
18002	Di	Di	Di	Di	E	Di	Di	Di	E	Di	Di
18003	Di	Post	Di	Post	Post	Post	Post	Post	Post	Post	Post
18004	Di	Di	Di	E	Di	Di	Pro	E	Di	Di	Di
18005	Post	Post	Post	Post	E	Post	Di	Di	E	Post	Post
18006	E	Di	Di	Di	Pro	Di	Di	Di	E	Di	Di

Di - Diestrus E - Estrus
Pro - Proestrus Post - Postestrus

Daily Estrous Cycle Observations, (F_{1a})

Test Article, Dosage Level, Female Number	Mating Days										Remating Days				
	1	2	3	4	5	6	7	8	9	10	1	2	3	4	5
Elemental Phosphorus: 0.005 mg/kg/day:															
17977	Pro	S													
17978	Di	Pro	S												
17979	Di	Pro	S												
17980	Di	Di	Pro	P											
17981	E	Di	Di	Di	Di	Di	Di	Di	Di	Di	Di	Di	Di	Di	Di
17982	S														
17983	S														
17984	S														
17985	Di	Di	Di	Di	S										
17986	Post	Di	Di	Di	S										
17987	Di	Di	Di	S											
17988	Di	S													
17989	Di	E	Di	Di	Di	S									
17990	S														
17991	Di	Di	Pro	Post	Di	Di	Di	E	Di	Di	Di	S			
17992	Di	Pro	E	Di	Di	Di	Pro	Di	Di	Di	S				
17993	Di	Di	Pro	S											
17994	S														
17995	S														
17996	Di	Pro	E	Di	Di	Di	S								
17997	E	Di	Di	Di	S										
17998	Pro	Di	Di	Di	S										
17999	Di	Di	Di	Di	Di	Di	Di	P							
18000	S														
18001	Di	Di	Pro	S											
18002	Di	S													
18003	Post	Post	Di	Di	E	Post	Post	Post	Post	Post	S				
18004	E	Di	Di	Pro	S										
18005	S														
18006	Pro	Di	Di	Di	Di	Di	Di	Di	Di	Di	Di	Di	Di	Di	Di

Di - Diestrus Post - Postestrus
E - Estrus P - Copulatory plug observed
Pro - Proestrus S - Sperm observed

Daily Estrous Cycle Observations (F_{1a})

Test Article, Dosage Level, Female Number	Premating Days 0	1	2	3	4	5	6	7	8	9	10
Elemental Phosphorus:											
0.015 mg/kg/day:											
18022	Di	Di	Pro	E	Di	Di	Di	E	Di	Di	Pro
18023	Di	Pro	Post	Di	Di	Di	Pro	Di	Di	Di	E
18024	Di	Di	Pro	E	Di	Di	Di	E	Di	Di	Di
18025	Di	Di	Pro	Post	Di	Di	Di	E	Di	Di	Pro
18026	Di	Di	Post	Di	Di	Di	E	Di	Di	Di	E
18027	Di	Pro	E	Di	Di	Di	E	Di	Di	Di	E
18028	Di	E	Di	Di	Di	E	Di	Di	Di	E	Di
18029	Di	Di	Di	Di	Di	Di	Di	Pro	E	Di	Di
18030	Di	E	Di	Di	Di	E	E	Post	Di	Di	Di
18031	Di	E	Di	Di	Di	E	Di	Di	Di	E	Di
18032	Di	Di	Pro	E	Di	Di	Di	E	Di	Di	Di
18033	E	Di	Di	Di	Di	Di	Di	Di	Post	Post	Post
18034	Di	Pro	E	Di	Di	Di	Pro	Di	Di	Di	Post
18035	Di	Pro	E	Di	Di	Di	Di	Di	Di	E	Post
18036	Pro	E	Di	Di	Di	E	Di	Di	Di	E	Di
18037	Di	Di	Di	E	Di	Di	Di	E	Di	Di	Di
18038	Di	Di	E	Post	Di	Di	Di	Di	Post	Di	Di
18039	E	Di	Di	Di	E	Di	Di	Di	E	Di	Di
18040	Di	Di	E	Di	Di	Di	E	Di	Di	Di	E
18041	Di	Di	E	Post	Post	Di	Di	Di	Pro	E	Di
18042	Di	E	Di	Di	Di	Di	Di	Di	Di	E	Di
18043	E	Di	Di	Di	E	Di	Di	Di	E	Di	Di
18044	Di	Pro	Post	Di	Di	Di	Pro	Di	Di	Di	Post
18045	Post	Di	Di	Di	E	Di	Di	Pro	E	Di	Di
18046	Di	Pro	E	Di	Di	Di	Pro	Di	Di	Pro	E
18047	Di	Di	Di	E	E	Di	Di	Di	E	Post	Post
18048	Di	Di	Di	Di	Di	E	E	Di	Di	Di	E
18049	E	Di	Di	Di	E	Di	Di	Di	E	Di	Di
18050	Di	Di	Di	Di	Pro	Di	Di	Di	Di	Di	Di
18051	Di	E	Post	Post	Di	Di	Di	E	E	Post	Post

Di - Diestrus E - Estrus
Pro - Proestrus Post - Postestrus

Daily Estrous Cycle Observations, (F_{1a})

Test Article, Dosage Level, Female Number	Mating Days										Remating Days				
	1	2	3	4	5	6	7	8	9	10	1	2	3	4	5
Elemental Phosphorus:															
0.015 mg/kg/day:															
18022	E	Di	Di	Di	S										
18023	Di	Di	Di	S											
18024	S														
18025	S														
18026	Di	Di	Di	S											
18027	Di	Di	Di	S											
18028	Di	Pro	E	Di	Di	Di	E	Post	Post	Di	Di	Di	Di	S	
18029	Di	P													
18030	Di	Pro	E	E	E	E	E	P							
18031	Di	Pro	S												
18032	S														
18033	Post	Di	Post	Post	Post	S									
18034	Di	Di	Di	Di	Di	Di	Di	Di	Di	Di	Di	Di	Di	Di	Di
18035	Di	Di	Di	S											
18036	Di	Pro	E	Di	Di	Di	S								
18037	S														
18038	Di	Post	Di	Di	Di	Di	Di	Post	Di	Di	Di	E	S		
18039	Di	E	Di	Di	Pro	S									
18040	Di	Di	Di	P											
18041	Di	Di	E	Post	Di	Di	Di	Di	Di	Di	Di	Di	Di	Di	Di
18042	Di	Di	E	Di	Di	Di	S								
18043	E	S													
18044	Di	Di	Di	S											
18045	Di	S													
18046	Di	Di	Di	E	Di	Di	Pro	S							
18047	Di	Di	Di	Di	Di	Di	Di	Di	Di	Di	Di	Di	Di	Di	S
18048	Di	Di	Di	S											
18049	Di	S													
18050	S														
18051	Post	Post	Di	Di	Di	E	E	Di	Di	Di	S				

Di - Diestrus Post - Posteatrus
E - Estrus P - Copulatory plug observed
Pro - Proestrus S - Sperm observed

Daily Estrous Cycle Observations (F_{1a})

Test Article, Dosage Level, Female Number	Premating Days										
	0	1	2	3	4	5	6	7	8	9	10
Elemental Phosphorus:											
0.075 mg/kg/day:											
18067	Di	Di	Pro	E	Di	Di	Di	E	Di	Di	Pro
18068	Di	Post	Di	Di	Di	E	Di	Di	Di	E	Post
18069	Di	Di	Pro	E	Di	Di	Di	E	Di	Di	Pro
18070	Di	Di	Di	E	Di	Di	Di	Pro	Di	Di	Di
18071	E	Di	Di	Di	Di	Di	Di	Di	E	Di	Di
18072	Di	Pro	Post	Di	Di	Di	Di	Post	Di	Di	Di
18073	Di	Di	Pro	Post	Di	Di	Di	E	Di	Di	Pro
18074	Di	E	Di	Di	Di	E	Di	Di	Di	E	Di
18075	Di	E	Di	Di	Di	E	Di	Di	Pro	E	Di
18076	Di	Post	Di	Di	Di	Post	Di	Di	Pro	E	Di
18077	Di	Pro	E	Di	Di	Di	E	Di	Di	Pro	E
18078	Di	E	Di	Di	Di	E	Di	Di	Di	E	Di
18079	Di	Di	E	Di	Di	Di	E	Di	Di	Di	E
18080	E	Di	Di	Di	Di	E	Di	Di	Di	E	E
18081	Di	Di	Pro	E	Di	Di	Di	E	Di	Di	Di
18082	Di	E	Di	Di	Di	E	Di	Di	Di	E	Di
18083	Di	Di	Di	E	Di	Di	Di	E	Di	Di	Di
18084	E	E	Di	Di	Di	E	Di	Di	Pro	E	Di
18085	Di	Pro	E	Di	Di	Di	E	Di	Di	Di	E
18086	Di	Post	Di	Di	Di	Post	Di	Di	Di	Post	Di
18087	Di	Pro	E	Di	Di	Di	E	Di	Di	Pro	E
18088	E	E	Post	Post	Post	Post	Post	E	Post	Post	Post
18089	E	Di	Di	Di	E	Di	Di	Di	E	Di	Di
18090	Di	Di	Di	E	Di	Di	Di	E	Di	Di	Di
18091	E	Post	Di	Di	Di	E	Di	Di	Di	E	Di
18092	E	Post	Post	Post	Post	Post	Post	Post	Post	Post	Post
18093	Di	Di	Di	E	Di	Di	Di	E	Di	Di	Pro
18094	Di	Di	Di	E	Di	Di	Di	E	Di	Di	Di
18095	Di	Di	E	Di	Di	Di	E	Di	Di	Di	E
18096	Di	Post	Di	Di	E	Post	Post	Post	Post	Post	Post

Di - Diestrus E - Estrus
Pro - Proestrus Post - Postestrus

Daily Estrous Cycle Observations, (F_{1a})

Test Article, Dosage Level, Female Number	Mating Days										Remating Days				
	1	2	3	4	5	6	7	8	9	10	1	2	3	4	5
Elemental Phosphorus:															
0.075 mg/kg/day:															
18067	S														
18068	Di	Di	Di	Di	Di	Di	Di	Di	Di	Di	Di	Di	Di	Di	Di
18069	S														
18070	S														
18071	Pro	E	Di	Di	Di	S									
18072	Post	Post	Di	Di	Pro	E	S								
18073	S														
18074	Di	Di	S												
18075	Di	Pro	S												
18076	Di	Pro	S												
18077	Di	Di	Pro	S											
18078	Di	Pro	S												
18079	Di	Di	Di	S											
18080	Post	Post	Di	Di	Di	Di	Di	Di	Di	Di	Di	Di	Di	Di	Di
18081	S														
18082	Di	Pro	E	Di	Di	Di	Di	S							
18083	E	Di	Di	Di	S										
18084	Di	Pro	S												
18085	Di	Di	Pro	S											
18086	Di	Pro	Post	Di	Di	Di	Di	Di	Di	Di	Di	Di	Di	Di	Di
18087	Di	Di	Pro	S											
18088	Post	Post	Post	Post	Post	Post	Post	Post	S						
18089	Pro	Post	Di	Di	Di	Di	Di	Di	Di	Di	Di	Di	Di	Di	Di
18090	E	Di	Di	Di	E	Di	Di	Di	S						
18091	Di	Pro	S												
18092	Post	Post	Post	Post	Post	Post	Post	Post	Post	Post	Post	Post	Post	Post	Post
18093	E	Post	Di	Di	Pro	S									
18094	S														
18095	Di	Di	Di	S											
18096	Post	Post	Post	Post	Post	Post	Post	Post	Post	Post	S				

Di - Diestrus
E - Estrus
Pro - Proestrus
Post - Postestrus
P - Copulatory plug observed
S - Sperm observed

Daily Estrous Cycle Observations (F_{1b})

Dosage Level, Female Number	Premating Days											
	0	1	2	3	4	5	6	7	8	9	10	
0 mg/kg/day:												
17932	Di	Di	Di	Di	E	Post	Post	Post	Di	Di	Pro	
17933	Di	E	Di	Di	Di	E	Di	Di	Pro	E	E	
17934	Di	Di	Di	E	Di	Di	Di	E	Di	Di	Pro	
17935	Di	Di	E	Di	Di	Di	E	Di	Di	Di	E	Di[a]
17936	E	Di	Di	Di	E	Di	Di	Di	E	Di	Di	
17937	Di	Di	Di	E	Di	Di	Di	E	Di	Di	Pro	
17938	Di	Di	Pro	E	Di	Di	Di	Di	Di	Di	Pro	
17939	Di	E	Di	Di	Di	E	Di	Di	Di	E	Di	
17940	Di	Di	Di	E	Di	Di	Di	E	Di	Di	Pro	
17941	Di	Di	Di	Di	E	Di	Di	Di	Pro	E	Di	
17942	E	Di	Di	Pro	E	Di	Di	Di	E	Di	Di	
17943	E	Di	Di	Pro	E	Di	Di	Di	E	Di	Di	
17944	Di	Di	Di	Di	Di	Di	Di	Di	Di	Di	Di	
17945	Post	Post	Post	Post	Post	Post	Di	Post	Post	Post	Post	
17946	Di	Pro	E	Di	Di	Di	Pro	Di	Di	Pro	E	
17947	Di	Di	E	Di	Di	Di	E	Di	Di	Di	E	
17948	Di	Di	Di	E	E	Di	Di	Pro	E	Post	Di	
17949	Di	E	Di	Di	Di	Di	Di	Di	Di	E	Di	
17950	E	Di	Di	Di	E	Di	Di	Di	E	Post	Post	
17951	Post	Di	Di	Di	E	Post	Post	Di	Di	Di	Di	
17952	Di	Di	E	Di	Di	Di	Di	Pro	Di	Di	E	Died
17953	E	Di	Di	Di	E	Di	Di	Di	E	Di	Di	
17954	Di	Di	E	E	Di	Di	Di	E	Post	Di	Di	
17955	Died											
17956	Di	Di	Di	E	Di	Di	Pro	E	Di	Di	Di	
17957	E	Post	Post	Post	Post	Post	E	E	E	Post	Post	
17958	Di	Post	Post	Post	Post	Post	Di	Di	Post	Post	Post	
17959	Post	Post	Di	Di	Di	Post	Di	Post	Di	Di	E	
17960	E	Di	Di	Pro	E	Di	Di	Di	E	Di	Di	
17961	Di	Di	E	Di	Di	Di	Di	Di	Di	Di	E	

Di - Diestrus E - Estrus
Pro - Proestrus Post - Postestrus
[a]Cohabitation delayed one day due to lack of available male(s)

Daily Estrous Cycle Observations, (F_{1b})

Dosage Level, Female Number	Mating Days										Remating Days				
	1	2	3	4	5	6	7	8	9	10	1	2	3	4	5
0 mg/kg/day:															
17932	S														
17933	S														
17934	S														
17935	Di	E	Di	Di	Di	Pro	S								
17936	Di	S													
17937	E	S													
17938	P														
17939	Di	Pro	S												
17940	S														
17941	Di	Di	Di	Di	Di	Pro	S								
17942	Di	S													
17943	Di	S													
17944	Di	P													
17945	E	E	E	E	E	E	S								
17946	Di	Di	Di	P											
17947	Di	Di	Di	S											
17948	Di	Di	S												
17949	Di	Di	S												
17950	S														
17951	E	E	Di	Di	Di	p									
17952	Died														
17953	Di	P													
17954	Di	P													
17955	Died														
17956	E	P													
17957	Di	Post	Post	Post	E	S									
17958	Di	Post	Post	Post	Post	Post	Post	Post	Post	Post	Post	P			
17959	E	S													
17960	Di	P													
17961	Di	Di	Di	S											

Di - Diestrus Post - Postestrus
E - Estrus P - Copulatory plug observed
Pro - Proestrus S - Sperm observed

Daily Estrous Cycle Observations (F_{1b})

Test Article, Dosage Level, Female Number	Premating Days 0	1	2	3	4	5	6	7	8	9	10	
Elemental Phosphorus:												
0.005 mg/kg/day:												
17977	Post	Post	Post	Post	Post	Post	Di	Di	Di	Post	Post	
17978	Di	Di	Di	E	Post	Post	Di	Di	Di	Di	Post	
17979	E	Di	Di	Di	E	Di	Di	Di	E	Di	Di	Di[a]
17980	Pro	E	Di	Di	Di	E	Di	Di	Di	Post	Di	Di[a]
17981	Di	Di	E	Di	Post	Di	Di	Di	Di	E	E	Di[a]
17982	E	Di	Di	E	Di	Di	Di	Di	Di	Post	Di	Di[a]
17983	Di	Di	E	Di	Di	Di	Di	E	Di	Di	Di	
17984	Di	Di	E	Post	Post	Post	Di	E	Post	Post	E	
17985	Di	E	Post	Di	Di	Di	Pro	E	Di	Di	Di	
17986	Di	E	Di	Di	Pro	E	Post	Post	Di	Di	Di	
17987	Di	Di	Di	E	Di	Di	Di	E	Di	Di	Di	
17988	Di	E	Post	Di	Di	Di	Di	Di	Di	Pro	E	
17989	Di	Di	Di	E	Di	Di	Di	Di	Di	Di	Di	
17990	Pro	E	Di	Di	Di	E	E	Di	Di	Pro	E	
17991	Di	Di	Di	E	Di	Di	Di	E	Di	Di	Di	
17992	Post	Di	Di	Pro	E	Di	Di	Di	E	Di	Di	
17993	E	Di	Di	Pro	E	Di	Di	Di	E	Di	Di	
17994	Di	Di	Di	E	Di	Di	Di	E	E	Di	Di	
17995	Di	Pro	E	Di	Di	Di	Di	E	Di	Di	Di	
17996	E	Di	Di	Di	E	E	Di	Di	Di	E	E	
17997	Di	E	Di	Di	Di	E	Di	Di	Di	E	Di	
17998	Di	E	Di	Di	Di	Post	Di	Di	Di	Post	Di	
17999	Post	Post	Post	Post	Post	Post	Post	Post	Post	Post	Post	
18000	Di	Di	Di	E	Di	Di	Pro	E	Di	Di	Di	
18001	Di	E	Di	Di	Di	E	Di	Di	Pro	E	Di	
18002	Di	Di	Pro	E	Di	Di	Di	E	Di	Di	Di	
18003	Post	Post	Post	Post	Post	Post	Di	Post	Post	Post	E	
18004	Di	Di	Di	Di	E	Di	Di	Pro	E	Di	Di	
18005	Post	Post	Post	Post	Post	Post	Post	Di	Post	Post	Di	
18006	Di	Di	Di	Di	Di	E	Di	Di	Pro	E	Di	

Di - Diestrus E - Estrus
Pro - Proestrus Post - Postestrus
[a]Cohabitation delayed one day due to lack of available male(s)

Daily Estrous Cycle Observations, (F_{1b})

Test Article, Dosage Level, Female Number	Mating Days										Remating Days				
	1	2	3	4	5	6	7	8	9	10	1	2	3	4	5
Elemental Phosphorus:															
0.005 mg/kg/day:															
17977	Di	S													
17978	S														
17979	E	Di	Di	Pro	S										
17980	Di	S													
17981	Di	Di	Di	Di	S										
17982	Di	Di	E	Di	Di	E	Post	Post	Post	Post	Post	Post	Post	Post	
17983	P														
17984	S														
17985	Di	S													
17986	P														
17987	E	P													
17988	Di	Di	Di	Di	Di	Di	Pro	S							
17989	Di	Di	Di	Di	E	S									
17990	E	Di	Di	Di	S										
17991	S														
17992	Di	E	Di	Di	Pro	S									
17993	Di	E	Di	Di	Di	S									
17994	S														
17995	Di	P													
17996	Di	Di	Di	S											
17997	Di	Di	S												
17998	Di	Pro	S												
17999	Post	Post	Post	Post	Di	Post	Post	Post	Post	Post	Post	Post	Post	Post	Post
18000	S														
18001	Di	Di	S												
18002	S														
18003	E	Post	Post	Post	E	E	S								
18004	Di	S													
18005	Di	E	E	Post	Post	Post	E	E	Post	Post	Di	Di	Post	Post	Post
18006	Di	Di	S												

Di - Diestrus Post - Postestrus
E - Estrus P - Copulatory plug observed
Pro - Proestrus S - Sperm observed

Daily Estrous Cycle Observations (F_{1b})

Test Article, Dosage Level, Female Number	Premating Days 0	1	2	3	4	5	6	7	8	9	10
Elemental Phosphorus:											
0.015 mg/kg/day:											
18022	Di	E	Di	Di	Di	E	Di	Di	Pro	E	Di
18023	Di	Di	Di	Pro	E	Di	Di	Di	E	Di	Di
18024	Post	Post	Post	Post	Post	Post	Post	Di	Post	Post	Post
18025	Di	Di	Di	Pro	E	Di	Di	Di	Di	Di	E
18026	E	Di	Di	Pro	E	Di	Di	Di	E	Di	Di
18027	E	Di	Di	Pro	E	Di	Di	Di	E	Di	Di
18028	Di	Di	Di	Di	Di	Di	E	Di	Di	Pro	E
18029	Di	Di	Di	Di	E	Di	Di	Di	E	Di	Di
18030	E	E	E	Post	Post	Post	E	Post	Post	Post	E
18031	E	Di	Di	Pro	E	Di	Di	Di	E	Di	Di
18032	Di	Di	Di	E	Di	Di	Di	E	Di	Di	Pro
18033	Post	Di	Di	Pro	Post	Post	Di	Di	Di	Post	Di
18034	Di	E	Di	Di	Pro	E	E	Di	Di	E	Di
18035	Di	E	Di	Di	Di	E	E	Di	Di	Di	E
18036	Di	Di	E	Di	Di	Pro	E	Di	Di	Di	E
18037	Di	Pro	E	Di	Di	Di	Di	Di	Di	Pro	E
18038	Di	Di	Di	E	Di	Di	Di	Di	Di	Di	Di
18039	Di	Di	E	Di	Di	Di	Di	Di	Di	Di	E
18040	E	Di	Di	Pro	E	Di	Di	E	E	Di	Di
18041	Di	Di	E	Post	Di	Di	Di	Di	E	Di	Di
18042	E	Di	Di	Di	E	Di	Di	Di	E	Di	Di
18043	E	Di	Di	Di	E	Di	Di	Di	E	Di	Di
18044	Di	Di	Di	Di	Di	Pro	Di	Di	Di	Di	E
18045	Di	E	Di	Di	Pro	E	Di	Di	Di	E	Di
18046	E	Di	Di	Di	E	Di	Di	Di	E	Di	Di
18047	Di	Di	Pro	E	Di	Di	Di	Pro	Di	Di	Di
18048	E	Di	Di	Di	E	Di	Di	Di	E	Di	Di
18049	Died										
18050	Post	Di	Di	Di	Di	E	Di	Di	Di	Di	E
18051	Post	Post	Post	Post	Post	Post	Di	Post	Post	Post	E

Di - Diestrus E - Estrus
Pro - Proestrus Post - Postestrus

Daily Estrous Cycle Observations, (F_{1b})

Test Article, Dosage Level, Female Number	Mating Days										Remating Days				
	1	2	3	4	5	6	7	8	9	10	1	2	3	4	5
Elemental Phosphorus:															
0.015 mg/kg/day:															
18022	Di	Di	S												
18023	Di	S													
18024	Di	Di	Di	Di	Di	S									
18025	Di	S													
18026	Di	S													
18027	Pro	P													
18028	Di	Di	Di	E	Di	Di	Pro	E	S						
18029	Di	S													
18030	E	E	E	E	E	E	E	E	E	E	E	E	E	E	Post
18031	Di	E	Di	Di	Pro	E	E	E	Di	Di	Pro	S			
18032	P														
18033	S														
18034	Di	Di	Pro	Di	Di	Di	S								
18035	S														
18036	Di	Di	Pro	S											
18037	Di	Di	Pro	S											
18038	Di	P													
18039	Di	Di	S												
18040	Di	S													
18041	Di	Pro	E	Di	Di	Di	Post	Post	Post	Post	Post	S			
18042	Di	S													
18043	Di	S													
18044	Di	Di	Di	P											
18045	Di	Di	P												
18046	Di	S													
18047	E	Di	Di	Di	E	S									
18048	Di	P													
18049	Died														
18050	Di	Di	Di	Di	Di	Di	Di	Di	Di	Di	Di	Di	Di	S	
18051	Di	E	E	E	E	E	Post	Post	Post	Post	Post	Post	Post	Post	Post

Di - Diestrus Post - Postestrus
E - Estrus P - Copulatory plug observed
Pro - Proestrus S - Sperm observed

Daily Estrous Cycle Observations (F_{1b})

Test Article, Dosage Level, Female Number	Premating Days 0	1	2	3	4	5	6	7	8	9	10
Elemental Phosphorus:											
0.075 mg/kg/day:											
18067	Di	E	Di	Di	Pro	E	Di	Di	Pro	E	Di
18068	Di	Di	Di	Di	Di	Post	Di	Post	Di	Di	E
18069	Di	E	Di	Di	Pro	E	Di	Di	Pro	E	Di
18070	E	Di	Di	Pro	E	Di	Di	Di	E	Di	Di
18071	Died										
18072	E	Di	Di	Di	E	Post	Di	Di	Di	E	Post
18073	Died										
18074	Di	Di	E	Di	Di	Di	Di	Di	Di	Pro	E
18075	Di	Di	E	Di	Di	Di	Di	Di	Di	Pro	E
18076	Died										
18077	Di	Di	E	Di	Di	Pro	E	Post	Di	Di	Di
18078	Di	Di	Pro	E	Di	Di	Di	E	Di	Di	Di
18079	Di	Di	Di	E	Di	Di	Di	Di	Di	Di	Di
18080	Di	Di	Di	E	Di	Di	Di	Pro	E	Di	Di
18081	Di	Pro	E	Di	Di	Di	E	Di	Di	Pro	E
18082	Died										
18083	Di	Pro	E	Di	Di	Di	E	Di	Di	Pro	E
18084	Post	Di	Di	Pro	E	Di	Di	Di	E	Di	Di
18085	Di	Di	Pro	E	Di	Di	Pro	Di	Di	Di	Di
18086	Di	Di	Di	Di	Di	Di	Di	Di	Di	E	Post
18087	E	Di	Di	Pro	E	Di	Di	Di	E	Di	Di
18088	E	E	Di	Di	Di	E	Di	Di	Di	E	Di
18089	Di	E	Di	Di	Di	E	Di	Di	Di	E	Di
18090	Di	Pro	E	Di	Di	Di	Di	Di	Di	Pro	E
18091	Di	Pro	E	Di	Di	Di	Di	Di	Di	Di	Di
18092	E	Post	Post	Post	Post	Post	E	E	Post	Post	Post
18093	Died										
18094	Died										
18095	Died										
18096	E	Post	Post	Post	Post	E	E	E	E	E	Post

Di - Diestrus E - Estrus
Pro - Proestrus Post - Postestrus

Daily Estrous Cycle Observations, (F_{1b})

Test Article, Dosage Level, Female Number	Mating Days										Remating Days				
	1	2	3	4	5	6	7	8	9	10	1	2	3	4	5
Elemental Phosphorus:															
0.075 mg/kg/day:															
18067	Di	Di	S												
18068	Post	Di	S												
18069	Di	Di	S												
18070	Di	P													
18071	Died														
18072	Di	Di	Di	E	S										
18073	Died														
18074	Di	Di	Pro	S											
18075	Di	Di	Pro	P											
18076	Died														
18077	S														
18078	P														
18079	S														
18080	Di	S													
18081	S														
18082	Died														
18083	Di	Di	Di	S											
18084	Di	S													
18085	S														
18086	S														
18087	Di	P													
18088	Di	Di	E	Di	Di	Di	E	E	E	E	E	E	E	E	E
18089	Di	Di	S												
18090	Di	Di	Pro	E	Di	Di	Pro	S							
18091	Di	Di	Pro	S											
18092	Di	Post	Post	Post	Post	Post	S								
18093	Died														
18094	Died														
18095	Died														
18096	Post	Post	E	Post	Post	Post	Post	Post	Post	Post	S				

Di - Diestrus
E - Estrus
Pro - Proestrus
Post - Posteestrus
P - Copulatory plug observed
S - Sperm observed

148

APPENDIX C

Individual Weekly Body Weights

14B3

Individual Male Weekly Body Weights (g)

Test Article, Dosage Level, Male Number	Study Week 0	1	2	3	4	5	6	7	8	9	10	11	12
0 mg/kg/day (Control):													
17917	277	324	365	401	435	464	496	509	546	567	587	606	602
17918	270	315	362	391	425	448	477	493	525	547	559	580	585
17919	280	309	341	367	397	415	443	451	474	492	502	525	409
17920	256	285	310	327	348	358	375	380	398	409	416	433	416
17921	270	306	340	365	385	402	419	418	445	459	471	488	479
17922	284	335	371	395	424	444	469	481	504	513	524	541	539
17923	264	304	333	352	366	383	407	401	417	430	437	456	443
17924	280	325	361	406	432	458	497	508	550	548	558	573	564
17925	278	324	362	393	417	437	468	486	506	521	530	549	540
17926	262	304	337	361	381	395	411	423	435	448	451	450	449
17927	263	295	323	352	377	403	429	454	470	484	499	519	506
17928	253	278	308	335	357	374	393	408	427	435	448	466	464
17929	271	319	351	387	418	437	465	487	519	535	548	568	561
17930	254	299	333	362	387	404	432	442	472	481	495	505	496
17931	260	288	309	331	350	367	385	395	418	426	423	438	414
Elemental Phosphorus, 0.005 mg/kg/day:													
17962	261	288	310	329	352	372	389	401	428	440	449	460	450
17963	262	307	336	375	392	412	426	440	450	459	470	486	448
17964	278	326	365	400	437	454	496	526	550	577	581	609	608
17965	259	297	333	360	388	391	421	439	463	484	488	494	484
17966	258	278	300	322	343	367	389	399	415	431	448	460	448
17967	266	297	330	350	364	385	397	410	435	444	454	468	465
17968	259	297	334	358	333	364	401	426	443	452	455	469	455
17969	277	312	349	375	391	406	437	446	463	474	478	488	486
17970	258	306	344	375	400	421	440	456	466	466	468	480	471
17971	263	288	317	337	358	377	393	399	415	421	425	433	432
17972	265	299	336	365	387	409	428	447	Sacrificed				
17973	263	302	335	360	384	404	427	442	463	476	485	500	493
17974	269	306	340	360	384	402	432	447	470	484	501	509	500
17975	260	300	335	366	390	415	445	459	474	494	510	525	522
17976	259	280	302	321	343	358	372	384	396	416	422	433	431
Elemental Phosphorus, 0.015 mg/kg/day:													
18007	254	284	310	336	360	380	405	414	428	445	450	465	452
18008	254	288	319	335	356	357	366	376	396	415	426	432	427
18009	279	316	347	378	401	418	438	452	473	490	508	505	501
18010	256	288	324	353	371	395	415	430	445	450	464	466	458
18011	275	312	342	365	384	397	418	434	453	461	468	508	481
18012	276	314	352	384	402	429	447	460	482	485	501	504	490
18013	271	311	347	377	394	415	431	438	460	469	481	485	482
18014	256	292	320	342	369	389	408	414	426	438	443	443	445
18015	264	310	342	373	399	420	450	461	485	498	511	521	525
18016	276	310	342	373	401	434	471	483	502	517	535	519	500
18017	260	299	324	351	377	397	413	427	446	455	466	483	483
18018	268	302	331	357	378	402	420	431	453	474	484	501	497
18019	261	306	339	374	401	430	461	482	501	520	541	548	544
18020	255	288	318	308	329	339	351	364	374	381	380	391	382
18021	258	300	319	338	359	372	389	394	410	418	416	429	430

1424

Individual Male Weekly Body Weights (g)

Test Article, Dosage Level, Male Number	Study Week 13	14	15	16	17	18	19	20	21	22	25
0 mg/kg/day (Control):											
17917	610	625	643	662	681	685	693	706	717	711	710
17918	598	597	615	640	652	663	674	684	694	694	708
17919	468	485	499	519	535	521	533	546	553	543	551
17920	430	439	449	460	448	444	448	456	466	454	459
17921	489	507	525	531	546	555	560	564	570	555	557
17922	556	573	572	600	610	614	621	630	639	631	643
17923	453	466	466	483	480	495	495	488	492	489	500
17924	585	602	608	614	632	646	647	647	664	645	660
17925	556	569	592	603	610	616	629	636	646	635	638
17926	459	477	488	495	506	511	527	535	548	537	542
17927	515	532	507	Died							
17928	471	485	506	518	526	536	537	541	546	532	533
17929	563	578	600	621	629	642	634	640	640	631	625
17930	509	514	527	550	546	544	541	543	552	542	536
17931	437	453	465	482	480	483	502	512	520	510	527
Elemental Phosphorus, 0.005 mg/kg/day:											
17962	459	463	477	490	500	504	512	521	532	522	524
17963	477	490	490	508	524	530	538	535	548	519	529
17964	621	639	657	676	Died						
17965	489	512	513	529	538	533	546	556	557	541	545
17966	460	468	478	492	503	512	516	518	522	511	526
17967	484	495	503	518	526	532	542	542	545	546	556
17968	463	473	487	494	499	508	514	519	518	497	505
17969	493	504	480	503	508	513	511	512	516	507	514
17970	493	513	521	537	539	547	560	565	570	567	577
17971	443	463	468	484	490	491	492	498	503	498	505
17972	Sacrificed										
17973	497	506	516	526	525	532	537	541	550	539	545
17974	512	526	533	539	549	560	558	562	565	555	569
17975	526	545	564	585	594	601	606	622	624	612	628
17976	439	455	464	473	486	492	496	497	501	497	509
Elemental Phosphorus, 0.015 mg/kg/day:											
18007	461	468	485	490	516	522	526	536	541	524	527
18008	414	434	435	451	455	460	466	473	482	472	476
18009	511	522	526	537	556	560	568	573	584	568	570
18010	472	480	493	511	518	522	526	526	528	515	526
18011	485	492	505	482	478	495	511	522	537	535	539
18012	515	526	533	553	578	580	589	593	603	595	591
18013	494	500	501	506	520	535	550	558	570	557	563
18014	454	467	479	485	499	506	505	510	519	518	528
18015	529	543	557	570	587	596	600	610	617	611	615
18016	518	538	557	571	590	603	614	627	632	628	624
18017	493	506	511	512	520	532	542	547	562	548	553
18018	509	519	544	564	588	599	613	624	637	632	636
18019	549	575	591	601	610	616	622	632	639	630	641
18020	409	425	437	445	446	443	449	457	465	439	434
18021	440	450	460	471	482	494	498	502	514	514	517

145

Individual Male Weekly Body Weights (g)

Test Article, Dosage Level, Male Number	Study Week 24	25	26	27	28	29	30	
0 mg/kg/day (Control):								
17917	712	717	728	743	750	765	770	Sacrificed
17918	720	728	735	750	758	759	773	Sacrificed
17919	565	562	574	559	566	581	579	Sacrificed
17920	469	477	479	493	499	499	504	Sacrificed
17921	573	590	600	614	618	628	612	Sacrificed
17922	652	656	672	679	688	700	700	Sacrificed
17923	501	500	507	509	513	518	510	Sacrificed
17924	663	679	690	696	719	731	734	Sacrificed
17925	654	660	669	679	684	699	698	Sacrificed
17926	543	561	565	571	576	588	595	Sacrificed
17927	Died							
17928	531	546	559	569	577	588	597	Sacrificed
17929	632	643	659	675	677	691	695	Sacrificed
17930	538	539	551	545	573	575	575	Sacrificed
17931	532	542	560	554	561	561	566	Sacrificed
Elemental Phosphorus, 0.005 mg/kg/day:								
17962	525	534	548	550	551	561	564	Sacrificed
17963	547	551	566	568	567	582	583	Sacrificed
17964	Died							
17965	536	547	545	530	525	519	508	Sacrificed
17966	528	532	544	561	572	577	580	Sacrificed
17967	568	577	584	600	599	608	611	Sacrificed
17968	510	525	529	547	545	552	554	Sacrificed
17969	525	511	529	540	534	541	525	Sacrificed
17970	585	596	604	618	623	636	637	Sacrificed
17971	513	521	528	536	544	554	527	Sacrificed
17972	Sacrificed							
17973	554	560	559	571	585	596	604	Sacrificed
17974	573	575	578	585	597	604	607	Sacrificed
17975	634	640	649	656	668	682	683	Sacrificed
17976	514	521	532	540	553	557	564	Sacrificed
Elemental Phosphorus, 0.015 mg/kg/day:								
18007	528	545	553	568	566	580	582	Sacrificed
18008	482	494	490	495	501	510	508	Sacrificed
18009	570	585	585	597	604	619	628	Sacrificed
18010	535	540	546	536	559	564	568	Sacrificed
18011	540	555	557	569	571	572	584	Sacrificed
18012	595	600	613	628	643	643	649	Sacrificed
18013	572	579	593	601	609	620	626	Sacrificed
18014	533	537	547	559	568	577	585	Sacrificed
18015	616	616	618	634	647	660	670	Sacrificed
18016	642	646	656	670	672	687	699	Sacrificed
18017	564	558	561	566	579	582	582	Sacrificed
18018	645	657	657	672	673	684	687	Sacrificed
18019	645	661	674	688	692	705	714	Sacrificed
18020	451	461	473	476	490	500	502	Sacrificed
18021	525	530	546	552	557	561	562	Sacrificed

146

Individual Male Weekly Body Weights (g)

Test Article, Dosage Level, Male Number	Study Week												
	0	1	2	3	4	5	6	7	8	9	10	11	12
Elemental Phosphorus 0.075 mg/kg/day:													
18052	269	314	349	376	392	415	439	449	473	494	505	491	485
18053	278	323	360	386	412	437	460	478	498	517	528	535	529
18054	260	288	305	332	351	372	396	410	423	443	452	460	440
18055	263	301	335	358	381	402	425	427	441	452	464	466	454
18056	271	313	345	374	402	425	453	464	489	489	501	508	502
18057	268	302	330	362	381	405	426	442	462	472	478	486	480
18058	272	323	352	377	399	422	451	462	492	510	522	536	534
18059	272	316	355	390	418	447	475	490	512	524	533	540	542
18060	259	289	318	339	360	377	405	421	440	454	463	475	462
18061	262	285	320	347	371	387	413	428	443	428	435	440	445
18062	266	299	335	368	391	420	444	456	477	496	514	521	507
18063	281	330	376	412	439	474	501	514	532	549	570	580	572
18064	281	335	366	386	410	433	467	491	519	535	549	568	561
18065	250	281	310	332	344	357	377	392	403	411	420	429	424
18066	262	300	331	358	386	404	429	445	463	477	491	504	494

149

Individual Male Weekly Body Weights (g)

Test Article, Dosage Level, Male Number	Study Week 13	14	15	16	17	18	19	20	21	22	23
Elemental Phosphorus 0.075 mg/kg/day:											
18052	476	486	490	503	503	506	518	527	535	522	530
18053	533	533	542	564	579	593	599	608	612	602	603
18054	455	463	481	494	497	504	510	512	517	511	516
18055	463	461	471	484	490	495	493	496	496	488	490
18056	519	521	531	542	551	565	564	571	579	575	578
18057	486	496	504	511	528	533	540	537	544	535	543
18058	548	562	576	593	606	613	619	627	627	628	623
18059	553	562	568	582	595	597	588	583	596	579	584
18060	473	486	500	516	527	536	538	545	552	542	546
18061	459	472	479	478	490	501	499	503	509	502	509
18062	503	523	536	550	561	567	560	563	562	563	559
18063	568	583	606	616	643	647	654	657	654	649	656
18064	573	584	604	619	632	646	645	657	661	649	655
18065	432	443	457	473	481	485	485	488	490	488	491
18066	497	512	525	542	550	559	569	575	590	574	585

148

Individual Male Weekly Body Weights (g)

Test Article, Dosage Level, Male Number	Study Week 24	25	26	27	28	29	30	
Elemental Phosphorus, 0.075 mg/kg/day:								
18052	535	545	554	560	568	583	592	Sacrificed
18053	607	623	628	626	632	639	647	Sacrificed
18054	528	536	543	546	539	551	549	Sacrificed
18055	495	499	502	509	518	518	526	Sacrificed
18056	588	595	600	615	624	628	628	Sacrificed
18057	543	550	552	546	542	550	552	Sacrificed
18058	632	645	653	667	680	683	690	Sacrificed
18059	594	612	620	626	643	650	659	Sacrificed
18060	559	577	573	575	588	594	604	Sacrificed
18061	513	519	522	532	548	549	551	Sacrificed
18062	568	551	563	569	579	579	590	Sacrificed
18063	666	675	681	687	699	709	718	Sacrificed
18064	667	671	675	688	684	697	700	Sacrificed
18065	492	500	509	518	526	533	536	Sacrificed
18066	581	597	605	620	634	648	651	Sacrificed

149.

Individual Female Weekly Body Weights (g)

Dosage Level, Female Number	Study Week 0	1	2	3	4	5	6	7	8	9	10	11	12
0 mg/kg/day (Control):													
17932	164	183	199	216	218	232	241	244	251	256	258	269	277
17933	191	214	235	234	226	244	244	261	258	274	268	275	288
17934	177	198	208	226	243	243	248	265	286	287	286	303	309
17935	184	205	216	222	234	250	249	250	260	270	277	281	293
17936	179	198	212	223	226	242	247	251	251	254	258	260	264
17937	186	208	228	239	248	252	269	279	283	285	298	305	295
17938	175	191	203	214	222	231	231	240	244	249	249	253	262
17939	170	193	208	215	220	232	242	242	244	251	257	257	259
17940	185	208	220	230	254	266	264	253	282	283	290	295	306
17941	173	195	209	219	231	240	245	249	260	260	262	267	279
17942	171	205	222	236	250	260	263	266	277	282	285	287	302
17943	184	209	215	216	229	248	254	255	274	275	275	277	292
17944	177	200	212	230	239	244	258	259	265	278	287	287	294
17945	181	204	215	224	238	243	250	247	254	260	267	268	264
17946	167	189	209	220	228	243	242	243	252	261	260	257	279
17947	187	219	235	250	255	271	288	290	297	302	312	311	314
17948	171	203	221	231	246	246	264	266	278	278	290	301	295
17949	173	192	209	210	232	243	252	255	265	274	274	278	287
17950	177	199	216	227	242	252	264	266	283	286	288	293	309
17951	176	217	235	278	284	294	313	330	338	339	350	367	355
17952	182	208	221	227	236	247	250	254	263	270	272	279	287
17953	190	225	240	254	272	285	295	296	307	320	324	327	326
17954	185	209	224	233	247	253	262	268	277	287	288	293	307
17955	168	180	181	195	196	215	209	217	223	232	234	238	240
17956	172	190	202	201	214	222	228	229	242	242	250	250	239
17957	168	196	204	216	223	231	242	244	257	258	267	272	262
17958	187	206	205	218	216	228	227	230	237	244	257	261	257
17959	177	195	205	208	224	214	228	233	241	240	245	255	252
17960	177	202	213	228	240	247	250	260	275	276	278	291	285
17961	166	187	195	214	225	231	234	243	253	248	256	261	259

B30

Individual Female Weekly Body Weights (g)

Dosage Level, Female Number	Study Week 13	14	15	16	17	18	19	20	21	22	23
0 mg/kg/day (Control):											
17932	291	291	280	277	278	273	267	275	278	299	319
17933	310	339	316	357	345	317	291	293	293	309	334
17934	333	378	338	358	353	341	306	309	306	321	349
17935	309	344	312	326	328	304	293	294	294	298	319
17936	272	291	361	282	299	282	263	273	278	273	285
17937	298	322	343	412	322	321	298	288	303	314	341
17938	271	296	275	289	279	289	261	269	267	279	295
17939	274	304	381	300	310	312	281	286	289	292	308
17940	312	303	300	304	315	311	314	315	316	328	349
17941	290	278	281	285	279	283	282	283	278	281	299
17942	317	311	311	310	311	311	319	321	321	324	344
17943	314	370	312	340	329	299	297	302	308	313	336
17944	310	323	298	310	303	309	309	331	352	359	369
17945	275	273	278	279	282	284	287	287	290	287	293
17946	302	335	312	330	340	302	282	283	284	293	300
17947	341	366	464	357	367	354	308	317	325	340	350
17948	317	340	375	322	319	341	301	300	299	310	325
17949	301	341	302	316	304	305	284	285	286	280	298
17950	320	369	322	314	321	295	291	305	304	318	335
17951	379	384	391	385	375	376	388	394	389	403	421
17952	302	298	292	292	296	294	295	300	298	Died	
17953	333	339	325	322	320	315	323	324	331	336	338
17954	321	347	326	326	325	318	307	307	313	314	332
17955	285	Died									
17956	250	270	277	285	258	265	263	268	267	275	289
17957	284	284	281	283	284	285	292	293	299	294	300
17958	267	272	265	266	268	257	258	265	263	273	280
17959	259	276	299	339	300	303	278	282	283	279	294
17960	305	329	401	316	320	323	296	295	301	309	321
17961	281	282	309	290	304	322	314	282	286	298	309

159

Individual Female Weekly Body Weights (g)

Dosage Level, Female Number	Study Week 24	25	26	27	28	29	30	
0 mg/kg/day (Control:								
17932	377	329	340	332	Sacrificed			
17933	391	344	347	337	Sacrificed			
17934	436	Died						
17935	337	405	351	362	307	Sacrificed		
17936	344	303	309	278	Sacrificed			
17937	396	349	358	326	Sacrificed			
17938	341	298	307	266	Sacrificed			
17939	338	310	321	282	Sacrificed			
17940	401	352	351	Died				
17941	316	380	318	308	285	Sacrificed		
17942	390	338	341	296	Sacrificed			
17943	392	340	376	344	Sacrificed			
17944	360	347	355	338	338	352	355	Sacrificed
17945	294	295	300	304	303	308	307	Sacrificed
17946	297	289	285	284	286	295	290	Sacrificed
17947	345	348	347	341	339	356	357	Sacrificed
17948	382	333	362	369	Sacrificed			
17949	344	348	338	277	Sacrificed			
17950	396	351	363	331	Sacrificed			
17951	434	473	450	448	434	Sacrificed		
17952	Died							
17953	385	346	340	342	Sacrificed			
17954	387	329	359	296	Sacrificed			
17955	Died							
17956	329	292	308	277	Sacrificed			
17957	298	299	301	299	305	305	303	Sacrificed
17958	277	276	283	284	290	296	285	Sacrificed
17959	353	307	327	278	Sacrificed			
17960	310	310	289	281	284	291	306	Sacrificed
17961	343	311	333	293	Sacrificed			

152

Individual Female Weekly Body Weights (g)

Test Article, Dosage Level, Female Number	Study Week 0	1	2	3	4	5	6	7	8	9	10	11	12
Elemental Phosphorus 0.005 mg/kg/day:													
17977	172	191	199	218	227	233	235	248	257	259	264	277	286
17978	182	189	201	210	213	216	221	225	231	230	236	237	247
17979	171	190	205	221	228	237	240	247	257	262	270	269	266
17980	172	192	206	216	220	231	239	243	247	255	261	267	247
17981	182	201	214	230	239	241	231	251	255	257	268	264	283
17982	182	202	211	218	234	243	243	248	264	273	273	271	288
17983	185	206	222	226	241	249	256	253	261	268	272	273	283
17984	166	177	185	197	205	208	216	223	223	222	235	234	246
17985	170	190	210	216	224	220	226	232	238	251	249	257	263
17986	180	207	225	238	245	256	260	263	275	285	286	288	288
17987	173	196	216	233	239	252	262	263	270	271	279	284	282
17988	182	202	228	242	250	260	260	265	272	279	276	284	300
17989	169	187	199	219	229	234	236	244	251	252	256	263	256
17990	180	199	208	215	232	236	237	240	251	258	260	259	274
17991	178	195	214	229	234	245	252	253	257	267	275	280	278
17992	170	195	205	216	226	229	242	247	250	251	260	266	263
17993	173	190	208	222	231	243	254	258	268	278	288	294	301
17994	181	208	222	239	250	264	268	265	278	286	283	285	300
17995	180	212	228	238	260	276	283	286	298	303	320	330	335
17996	170	191	211	221	230	240	254	260	268	270	278	285	282
17997	185	206	219	228	244	254	260	257	273	284	279	277	275
17998	167	191	198	205	224	232	238	237	251	257	258	256	258
17999	176	196	203	217	219	229	241	240	241	246	255	267	269
18000	180	199	209	220	230	238	246	242	248	255	264	266	277
18001	178	192	205	213	218	226	236	237	240	245	250	249	245
18002	180	202	210	208	222	223	230	240	238	252	260	268	292
18003	171	194	211	221	239	246	247	253	257	259	263	270	273
18004	180	200	206	211	220	232	240	240	247	260	257	256	253
18005	178	196	207	218	229	237	244	252	252	264	269	277	304
18006	178	200	207	221	226	233	239	241	249	251	254	258	257

153

Individual Female Weekly Body Weights (g)

Dosage Level, Female Number	Study Week 13	14	15	16	17	18	19	20	21	22	23
Elemental Phosphorus 0.005 mg/kg/day:											
17977	292	295	294	293	296	294	288	290	296	303	316
17978	268	263	254	255	255	252	255	257	248	278	294
17979	277	306	358	295	305	306	285	292	294	291	299
17980	275	298	351	293	306	287	278	276	282	284	297
17981	298	292	285	281	283	287	280	286	285	291	295
17982	297	342	306	313	319	291	283	274	269	273	281
17983	295	324	306	320	315	320	296	292	288	Died	
17984	262	286	276	288	284	281	264	266	269	280	277
17985	277	305	350	286	301	279	265	264	276	285	303
17986	303	321	390	323	336	324	303	306	308	316	338
17987	301	333	412	336	315	322	294	305	306	310	333
17988	306	339	305	315	318	323	295	297	300	301	305
17989	277	301	345	299	312	303	275	285	284	273	279
17990	302	345	319	339	351	304	292	282	277	284	306
17991	283	300	318	395	334	337	327	292	301	312	328
17992	263	280	292	341	294	290	291	280	284	286	296
17993	323	352	408	323	328	316	293	308	318	313	340
17994	321	339	329	328	330	334	318	318	311	336	339
17995	351	382	353	341	357	308	301	315	323	327	348
17996	293	320	370	331	349	329	319	310	302	307	322
17997	294	321	385	325	309	315	290	296	298	304	306
17998	287	295	279	278	278	281	289	287	290	303	320
17999	269	285	272	276	274	275	271	275	274	272	276
18000	299	340	309	333	357	334	293	299	296	307	324
18001	252	296	363	295	287	297	272	273	274	278	298
18002	316	356	311	324	353	325	292	304	304	330	354
18003	268	287	292	239	286	282	285	288	286	293	306
18004	269	286	344	274	292	280	244	256	262	275	294
18005	302	300	294	295	295	300	299	305	306	311	315
18006	271	292	270	285	295	304	265	273	274	273	289

154

Individual Female Weekly Body Weights (g)

Test Article, Dosage Level, Female Number	Study Week 24	25	26	27	28	29	30	
Elemental Phosphorus, 0.005 mg/kg/day:								
17977	313	313	308	305	313	323	326	Sacrificed
17978	328	302	305	290	Sacrificed			
17979	299	295	305	308	294	308	305	Sacrificed
17980	337	294	320	272	Sacrificed			
17981	295	297	304	310	305	311	311	Sacrificed
17982	277	278	283	286	294	305	306	Sacrificed
17983	Died							
17984	269	274	272	272	272	275	265	Sacrificed
17985	349	299	312	295	Sacrificed			
17986	396	358	366	335	Sacrificed			
17987	391	361	368	348	Sacrificed			
17988	323	394	329	332	300	Sacrificed		
17989	279	285	290	289	287	295	295	Sacrificed
17990	314	319	321	330	322	Sacrificed		
17991	379	343	358	308	Sacrificed			
17992	312	386	332	329	287	Sacrificed		
17993	343	340	341	344	339	344	347	Sacrificed
17994	376	347	347	344	Sacrificed			
17995	405	356	364	337	Sacrificed			
17996	367	355	374	328	Sacrificed			
17997	335	334	347	336	Sacrificed			
17998	349	329	338	338	Sacrificed			
17999	278	280	289	288	288	293	287	Sacrificed
18000	388	347	370	343	Sacrificed			
18001	339	302	326	267	Sacrificed			
18002	425	352	377	353	Sacrificed			
18003	317	312	310	311	312	318	304	Sacrificed
18004	340	285	303	251	Sacrificed			
18005	317	322	325	326	334	337	336	Sacrificed
18006	322	304	324	312	Sacrificed			

155

Individual Female Weekly Body Weights (g)

Test Article, Dosage Level, Female Number	Study Week 0	1	2	3	4	5	6	7	8	9	10	11	12
Elemental Phosphorus 0.015 mg/kg/day:													
18022	180	194	199	201	208	216	216	214	225	234	235	253	245
18023	170	196	209	223	221	228	237	245	254	257	272	275	269
18024	188	211	220	229	243	253	256	256	265	273	275	277	299
18025	170	195	209	210	222	237	240	240	255	263	265	268	277
18026	183	207	208	211	218	221	228	228	232	241	251	249	246
18027	182	205	220	231	238	242	260	262	261	269	280	271	273
18028	165	190	197	207	213	213	225	232	230	226	240	244	241
18029	173	200	206	221	228	238	243	249	254	257	255	256	260
18030	185	212	221	243	253	258	264	275	282	289	291	290	290
18031	179	209	230	247	255	261	276	285	288	291	299	303	311
18032	179	195	205	207	223	234	234	238	248	257	260	264	283
18033	178	195	204	214	227	231	230	232	233	235	242	242	246
18034	164	188	196	207	219	232	243	241	248	261	268	264	280
18035	169	194	210	230	234	247	251	255	261	264	275	273	276
18036	180	204	223	237	246	257	298	271	280	278	292	300	295
18037	168	192	210	224	227	240	248	247	253	259	267	266	280
18038	178	205	222	238	241	254	258	263	269	269	278	280	279
18039	173	199	213	225	234	241	246	252	257	258	258	273	272
18040	168	200	214	227	231	243	251	249	254	264	274	272	274
18041	183	214	229	250	263	276	281	295	304	318	327	331	326
18042	179	199	214	228	232	240	243	243	259	264	269	275	270
18043	179	211	216	232	242	250	255	265	273	270	278	276	289
18044	182	199	211	221	227	234	241	247	243	256	262	267	266
18045	178	201	210	221	233	238	242	250	258	265	269	275	286
18046	177	191	200	206	209	217	226	229	232	242	246	245	245
18047	179	199	222	234	244	247	245	251	268	268	273	280	280
18048	184	202	217	229	232	257	246	257	259	261	270	270	249
18049	191	207	219	228	244	260	266	265	276	285	284	292	295
18050	184	206	213	225	242	250	255	257	256	273	268	271	280
18051	187	209	227	240	253	252	261	263	271	275	275	281	286

1546

Individual Female Weekly Body Weights (g)

Dosage Level, Female Number	Study Week 13	14	15	16	17	18	19	20	21	22	23
Elemental Phosphorus 0.015 mg/kg/day:											
18022	272	302	370	312	317	326	283	279	279	293	312
18023	299	334	413	309	312	317	306	303	291	313	332
18024	311	296	296	297	291	291	296	296	302	317	324
18025	295	307	306	295	296	288	294	292	292	301	317
18026	273	290	362	286	301	304	266	266	265	283	293
18027	290	315	392	292	311	303	274	276	287	298	312
18028	259	262	283	326	298	292	318	272	260	268	283
18029	258	253	250	256	262	258	260	257	262	258	262
18030	302	296	303	313	321	326	336	340	344	344	346
18031	325	339	397	328	330	331	314	325	323	320	331
18032	300	292	280	285	292	290	288	289	287	309	332
18033	260	255	245	251	254	254	258	263	259	261	262
18034	295	305	305	317	307	301	300	298	297	307	319
18035	295	316	413	321	332	309	297	302	299	307	330
18036	305	326	368	317	329	327	301	291	302	316	322
18037	291	327	288	309	307	294	280	275	276	286	298
18038	286	290	295	304	299	293	297	300	303	312	328
18039	294	315	384	322	319	325	299	287	295	302	298
18040	285	327	415	323	334	334	292	303	304	318	346
18041	345	355	345	348	346	348	354	350	357	348	354
18042	278	298	334	294	304	300	276	277	283	292	313
18043	308	347	316	331	336	297	297	301	295	293	294
18044	272	293	366	294	309	291	275	277	285	289	297
18045	306	346	306	315	337	314	288	294	292	299	322
18046	256	269	305	274	294	308	301	272	275	280	290
18047	293	294	317	362	326	332	334	293	296	297	319
18048	283	307	381	312	329	291	276	286	282	288	307
18049	308	334	268	Died							
18050	298	306	310	306	306	303	298	301	297	308	312
18051	290	310	319	299	305	305	302	291	293	292	297

157

Individual Female Weekly Body Weights (g)

Test Article, Dosage Level, Female Number	Study Week 24	25	26	27	28	29	30	
Elemental Phosphorus, 0.015 mg/kg/day:								
18022	350	325	348	295	Sacrificed			
18023	387	350	339	346	Sacrificed			
18024	347	420	351	352	352	Sacrificed		
18025	312	307	304	303	310	319	320	Sacrificed
18026	280	270	264	260	271	271	264	Sacrificed
18027	364	312	330	287	Sacrificed			
18028	303	358	319	340	342	Sacrificed		
18029	268	269	266	277	279	280	273	Sacrificed
18030	354	358	367	377	386	391	392	Sacrificed
18031	358	355	411	353	346	Sacrificed		
18032	378	341	332	315	Sacrificed			
18033	264	265	267	277	280	277	272	Sacrificed
18034	343	392	330	324	324	Sacrificed		
18035	394	353	367	345	Sacrificed			
18036	350	338	350	344	Sacrificed			
18037	323	304	320	320	Sacrificed			
18038	384	329	350	296	Sacrificed			
18039	299	305	311	307	310	311	325	Sacrificed
18040	402	352	368	356	Sacrificed			
18041	338	359	361	369	375	389	396	Sacrificed
18042	345	311	322	314	Sacrificed			
18043	296	296	293	294	297	308	310	Sacrificed
18044	325	308	334	308	Sacrificed			
18045	365	318	327	285	Sacrificed			
18046	317	299	310	321	Sacrificed			
18047	340	421	353	334	329	Sacrificed		
18048	355	315	332	296	Sacrificed			
18049	Died							
18050	325	347	422	343	343	330	Sacrificed	
18051	305	312	315	322	328	335	336	Sacrificed

158

Individual Female Weekly Body Weights (g)

Test Article, Dosage Level, Female Number	Study Week 0	1	2	3	4	5	6	7	8	9	10	11	12
Elemental Phosphorus 0.075 mg/kg/day:													
18067	174	188	198	203	216	222	228	228	257	244	248	248	262
18068	169	192	206	221	226	240	256	255	266	264	270	280	269
18069	186	210	221	226	257	247	254	256	268	283	290	286	295
18070	175	188	201	202	213	216	222	218	227	236	241	244	254
18071	168	183	188	203	216	217	220	224	234	235	239	242	242
18072	166	181	203	212	223	236	238	247	253	262	265	265	270
18073	180	195	207	213	224	230	235	239	244	252	255	258	259
18074	186	174	187	200	205	209	220	227	232	236	245	249	248
18075	180	194	207	215	220	223	224	229	230	229	243	245	247
18076	178	199	213	226	233	239	245	251	259	258	268	268	273
18077	173	195	213	224	230	235	242	251	249	260	270	275	272
18078	171	201	219	237	250	258	263	258	272	276	287	298	295
18079	191	212	218	238	241	250	273	270	271	281	288	288	281
18080	180	207	224	240	251	266	268	274	280	295	299	307	300
18081	179	198	204	213	233	238	245	242	251	257	262	262	277
18082	172	196	210	223	229	230	239	246	250	253	260	264	267
18083	175	199	213	225	231	245	247	245	250	255	261	260	266
18084	172	204	216	224	237	248	256	252	256	259	272	275	270
18085	164	185	201	212	216	226	236	233	243	247	260	255	262
18086	175	202	238	255	260	264	262	272	276	276	286	293	296
18087	175	196	214	227	238	252	275	273	273	284	288	295	297
18088	174	199	205	217	231	232	242	248	264	271	287	296	296
18089	181	207	215	233	246	253	262	272	278	282	289	298	305
18090	169	193	207	215	223	226	231	230	237	243	248	250	255
18091	177	203	218	227	240	245	254	260	265	268	277	269	283
18092	171	201	215	221	224	236	239	234	242	249	257	261	255
18093	186	203	210	213	225	236	243	242	253	264	265	266	269
18094	168	184	187	189	200	208	213	216	226	233	236	238	250
18095	186	212	234	234	254	262	272	278	282	291	302	299	301
18096	168	197	210	215	223	232	243	242	249	253	250	253	253

159

Individual Female Weekly Body Weights (g)

Dosage Level, Female Number	Study Week 13	14	15	16	17	18	19	20	21	22	23
Elemental Phosphorus 0.075 mg/kg/day:											
18067	276	292	274	284	285	273	252	252	262	275	Died
18068	299	295	314	302	301	298	301	294	297	301	305
18069	312	301	296	302	304	307	315	311	318	318	338
18070	266	303	272	285	302	276	264	267	271	283	299
18071	258	283	324	Died							
18072	282	301	333	290	305	306	305	300	290	292	306
18073	281	325	Died								
18074	257	284	254	262	290	266	242	248	250	251	259
18075	256	260	252	254	257	260	257	259	261	274	293
18076	287	329	Died								
18077	289	315	377	312	330	315	293	295	301	308	322
18078	314	340	310	337	334	330	300	313	321	332	352
18079	311	331	407	333	363	340	285	293	295	318	342
18080	313	315	311	321	320	323	327	332	335	341	360
18081	306	338	285	316	340	316	288	288	288	314	333
18082	280	301	339	Died							
18083	285	304	363	303	315	308	290	293	295	305	323
18084	283	306	373	298	305	300	289	275	278	286	304
18085	271	295	354	305	317	304	276	283	283	293	315
18086	312	324	305	306	301	313	310	312	316	339	349
18087	305	333	392	290	328	306	280	298	306	314	332
18088	308	303	288	294	305	311	316	319	320	327	332
18089	319	315	323	324	328	331	348	346	355	366	383
18090	265	282	307	282	311	311	280	270	276	282	294
18091	304	338	306	321	339	329	300	301	299	307	320
18092	262	263	264	322	275	281	287	287	296	304	316
18093	279	293	356	Died							
18094	262	298	Died								
18095	311	342	408	Died							
18096	257	281	274	276	283	284	289	288	292	292	296

168

Individual Female Weekly Body Weights (g)

Test Article, Dosage Level, Female Number	Study Week 24	25	26	27	28	29	30	
Elemental Phosphorus, 0.075 mg/kg/day:								
18067	Died							
18068	307	312	320	321	324	325	331	Sacrificed
18069	359	353	352	348	Sacrificed			
18070	338	303	312	291	Sacrificed			
18071	Died							
18072	324	318	332	346	322	Sacrificed		
18073	Died							
18074	391	Died						
18075	320	290	297	300	Sacrificed			
18076	Died							
18077	393	318	341	Died				
18078	410	363	363	334	Sacrificed			
18079	407	Died						
18080	404	356	350	Died				
18081	399	Died						
18082	Died							
18083	354	326	332	331	Sacrificed			
18084	346	Died						
18085	367	331	332	300	Sacrificed			
18086	336	325	327	318	326	336	330	Sacrificed
18087	375	Died						
18088	325	333	340	352	350	359	363	Sacrificed
18089	426	392	339	356	Sacrificed			
18090	313	377	Died					
18091	352	325	348	317	Sacrificed			
18092	307	307	316	316	330	335	338	Sacrificed
18093	Died							
18094	Died							
18095	Died							
18096	298	304	307	307	312	317	316	Sacrificed

APPENDIX D

Individual Maternal Body Weights During Gestation and Lactation

167

Individual and Group Mean Maternal Body Weights
During Gestation and Lactation - F_{1a}

Dosage Level, Dam Number	Actual Body Weight (grams)							
	Day of Gestation				Day of Lactation			
	0	7	13	20	0	7	14	21
0 mg/kg/day (Control):								
17932[b]	261	289	295	284	Did not deliver			
17933	272	304	319	395	317	327	327	320
17934	294	319	353	458	335	335	362	340
17935	284	300	314	373	310	313	335	315
17936	264	272	280	351	278	286	385	289
17937	297	318	337	404	313	314	317	293
17938	252	268	27[illegible]	334	282	288	285	283
17939	259	274	293	369	285	285	312	314
17940[b]	291	306	316	299	Did not deliver			
17941[b]	262	280	280	277	Did not deliver			
17942[b]	287	307	323	307	Did not deliver			
17943	279	302	328	405	289	326	335	333
17944[b]	287	316	325	317	Did not deliver			
17945[b]	263	278	273	279	Did not deliver			
17946	270	287	316	376	302	329	333	319
17947	314	341	362	446	347	355	370	347
17948	292	322	351	401	331	325	333	341
17949	274	292	313	376	297	308	302	303
17950	294	308	329	406	314	326	307	315
17951[b]	365	372	379	394	Did not deliver			
17952[b]	277	295	305	291	Did not deliver			
17953	a				Did not deliver			
17954	293	313	329	366	329	323	327	316
17955	233	261	Died gestation day 13 (gravid)					
17956[b]	245	265	275	291	Did not deliver			
17957[b]	266	285	284	282	Did not deliver			
17958	a				Did not deliver			
17959	257	273	289	322	313	295	297	282
17960	285	305	319	385	320	319	310	328
17961	256	284	303	360	300	303	326	311
Mean	275	296	317	378	310	315	327	315
±S.D.	19.9	21.4	24.6	41.5	19.7	19.1	26.1	19.8

a - No evidence of copulation
b - Gestation body weights not included in calculation of mean
S.D. - Standard deviation

163

Individual and Group Mean Maternal Body Weights
During Gestation and Lactation - F_{1a}

Test Article, Dosage Level, Dam Number	Actual Body Weight (grams)							
	Day of Gestation				Day of Lactation			
	0	7	13	20	0	7	14	21
Elemental Phosphorus, 0.005 mg/kg/day:								
17977[b]	279	291	302	293	Did not deliver			
17978[b]	243	265	270	259	Did not deliver			
17979	249	279	299	350	276	299	311	308
17980	247	275	294	348	269	300	302	287
17981	a				Did not deliver			
17982	276	286	308	393	311	310	322	300
17983	272	293	309	345	303	323	312	317
17984	233	255	278	306	271	293	300	277
17985	264	288	305	353	287	302	282	284
17986	293	303	321	391	300	340	329	317
17987	282	301	329	390	342	326	324	336
17988	282	300	316	392	301	319	306	326
17989	259	281	298	358	283	314	313	314
17990	258	291	321	394	306	324	320	326
17991	288	299	318	395	345	337	333	324
17992	263	280	290	329	275	287	298	300
17993	301	323	340	396	342	330	320	311
17994	281	307	323	356	336	330	324	336
17995	324	338	358	415	345	343	335	328
17996	279	301	327	382	319	327	344	317
17997	278	297	321	384	310	328	325	338
17998[b]	261	287	295	278	Did not deliver			
17999[b]	260	277	276	275	Did not deliver			
18000	258	283	309	372	297	323	328	335
18001	245	262	283	344	282	299	290	289
18002	267	308	330	411	311	320	327	328
18003[b]	268	287	291	284	Did not deliver			
18004	254	272	286	364	262	273	288	280
18005[b]	276	298	302	293	Did not deliver			
18006	a				272	283	296	298
Mean	271	292	312	370	302	314	314	312
±S.D.	20.7	18.9	19.6	28.5	26.6	19.1	16.5	19.3

a - No evidence of copulation
b - Gestation body weights not included in calculation of mean
S.D. - Standard deviation

164

Individual and Group Mean Maternal Body Weights
During Gestation and Lactation - F_{1a}

Test Article, Dosage Level, Dam Number	Actual Body Weight (grams)							
	Day of Gestation				Day of Lactation			
	0	7	13	20	0	7	14	21
Elemental Phosphorus, 0.015 mg/kg/day:								
18022	245	280	302	372	276	317	328	320
18023	266	299	319	394	305	326	315	327
18024[b]	279	300	299	298	Did not deliver			
18025[b]	268	285	302	313	Did not deliver			
18026	245	273	280	352	273	293	303	309
18027	271	290	302	377	297	299	305	300
18028	240	269	284	360	276	279	298	301
18029[b]	252	253	251	247	Did not deliver			
18030[b]	288	291	298	306	Did not deliver			
18031	302	321	332	383	324	328	335	318
18032[b]	270	287	302	284	Did not deliver			
18033[b]	246	259	251	248	Did not deliver			
18034	a				Did not deliver			
18035	274	295	308	395	317	328	341	305
18036	295	312	328	390	329	329	335	338
18037	268	283	295	375	285	305	307	307
18038[b]	277	298	302	308	Did not deliver			
18039	272	297	313	397	309	332	329	331
18040	273	285	318	406	314	328	339	334
18041	a				Did not deliver			
18042	270	287	302	354	288	290	308	291
18043	273	298	310	382	314	331	333	300
18044	266	272	290	356	291	299	304	302
18045	271	292	320	392	294	306	325	307
18046	250	262	277	237	271	290	308	302
18047	281	299	323	401	311	332	337	319
18048	265	283	305	373	285	310	306	290
18049	286	301	316	388	285	Died lactation day 6		
18050[b]	277	290	295	306	Did not deliver			
18051[b]	290	310	317	305	Did not deliver			
Mean	269	289	307	373	298	312	320	311
±S.D.	16.1	14.8	15.9	36.7	18.3	17.6	15.0	14.4

a - No evidence of copulation
b - Gestation body weights not included in calculation of mean
S.D. - Standard deviation

169

Individual and Group Mean Maternal Body Weights
During Gestation and Lactation - F_{1a}

Test Article, Dosage Level, Dam Number	Actual Body Weight (grams)							
	Day of Gestation				Day of Lactation			
	0	7	13	20	0	7	14	21
Elemental Phosphorus, 0.075 mg/kg/day:								
18067	247	269	283	319	281	280	287	288
18068	a				Did not deliver			
18069[b]	285	300	308	296	Did not deliver			
18070	243	257	275	332	263	277	298	285
18071	240	260	276	339	Died gestation day 22			
18072	264	285	303	364	284	301	308	305
18073	254	269	291	365	Died gestation day 21			
18074	242	258	272	330	254	262	289	269
18075[b]	242	258	258	253	Did not deliver			
18076	267	288	317	391	Died gestation day 22			
18077	270	289	308	395	309	315	326	294
18078	289	310	329	407	311	337	347	325
18079	281	311	327	371	326	340	349	334
18080	a				Did not deliver			
18081	260	293	314	383	285	306	327	329
18082	264	289	309	380	Died gestation day 22			
18083	270	282	304	361	294	296	307	312
18084	263	283	297	349	277	301	295	291
18085	262	271	292	347	312	305	306	308
18086	a				Did not deliver			
18087	297	305	327	384	313	288	329	302
18088[b]	301	304	290	286	Did not deliver			
18089	a				Did not deliver			
18090	256	270	286	342	272	297	303	278
18091	276	299	320	395	302	321	321	327
18092	a				Did not deliver			
18093	265	278	297	355	Died gestation day 21			
18094	240	251	270	346	Died gestation day 22			
18095	301	311	337	399	Died gestation day 21			
18096[b]	257	281	277	277	Did not deliver			
Mean	264	282	302	364	292	302	314	303
±S.D.	17.5	18.5	20.2	25.5	21.3	21.8	19.9	20.3

a - No evidence of copulation
b - Gestation body weights not included in calculation of mean
S.D. - Standard deviation

165

Individual and Group Mean Maternal Body Weights
During Gestation and Lactation - F_{1b}

Dosage Level, Dam Number	Actual Body Weight (grams)							
	Day of Gestation				Day of Lactation			
	0	7	13	20	0	7	14	21
0 mg/kg/day (Control):								
17932	279	309	328	396	333	330	336	311
17933	294	313	338	401	335	354	339	314
17934	301	328	361	463	Died gestation day 22			
17935	295	319	346	421	337	359	358	334
17936	268	278	289	371	285	315	296	305
17937	299	324	341	432	330	352	346	318
17938	265	278	294	359	291	302	312	291
17939	285	296	307	370	306	321	341	320
17940	320	331	355	418	338	347	351	Died lactation day 18
17941	283	299	316	380	317	314	305	303
17942	312	332	346	416	330	341	336	322
17943	300	328	344	417	325	364	343	327
17944[b]	345	367	375	347	Did not deliver			
17945[b]	291	293	294	295	Did not deliver			
17946[b]	290	303	311	295	Did not deliver			
17947[b]	332	356	351	347	Did not deliver			
17948	303	322	347	414	325	361	364	295
17949	283	285	314	392	305	333	319	340
17950	300	318	337	414	338	344	358	312
17951	403	420	434	457	439	451	442	438
17952	Died prior to F_{1b} mating							
17953	325	338	350	413	334	341	339	327
17954	308	318	341	421	326	344	327	307
17955	Died prior to F_{1b} mating							
17956	265	283	296	354	308	295	296	298
17957[b]	299	300	298	300	Did not deliver			
17958[b]	284	281	276	281	Did not deliver			
17959	267	285	302	374	[c]	327	309	321
17960[b]	290	315	317	312	Did not deliver			
17961	290	310	325	411	309	326	339	334
Mean	297	315	334	404	327	341	338	322
±S.D.	29.7	30.7	31.4	29.1	31.5	32.2	31.8	31.2

401-189

b - Gestation body weights not included in calculation of mean
c - Lactation day 0 body weight inadvertently not recorded
S.D. - Standard deviation

169

Individual and Group Mean Maternal Body Weights
During Gestation and Lactation - F_{1b}

Test Article, Dosage Level, Dam Number	Actual Body Weight (grams)							
	Day of Gestation				Day of Lactation			
	0	7	13	20	0	7	14	21
Elemental Phosphorus, 0.005 mg/kg/day:								
17977[b]	301	312	312	314	Did not deliver			
17978	253	281	296	340	316	304	302	287
17979[b]	293	299	296	298	Did not deliver			
17980	283	289	308	379	287	307	311	292
17981[b]	287	297	292	297	Did not deliver			
17982[b]	a				Did not deliver			
17983[d]	286	Died gestation day 1						
17984[b]	266	282	275	271	Did not deliver			
17985	275	293	313	375	304	316	323	273
17986	306	328	337	414	354	359	373	340
17987	302	319	335	372	352	358	358	360
17988	302	311	328	413	319	331	334	320
17989[b]	271	277	280	286	Did not deliver			
17990	281	312	313	329	307	316	337	329
17991	302	310	333	396	357	350	348	318
17992	286	299	310	371	316	333	336	310
17993[b]	314	341	343	339	Did not deliver			
17994	314	338	342	383	358	339	352	350
17995	315	332	353	444	376	353	372	331
17996	302	323	343	406	350	363	354	352
17997	298	312	320	361	326	339	343	324
17998	285	309	329	381	329	333	338	315
17999[b]	a				Did not deliver			
18000	291	306	329	405	336	348	365	336
18001	274	284	304	378	297	311	285	297
18002	305	335	366	442	349	346	381	346
18003[b]	293	302	317	312	Did not deliver			
18004	267	284	294	375	274	296	300	283
18005[b]	a				Did not deliver			
18006	273	280	302	361	296	318	319	314
Mean	290	308	324	386	326	333	338	320
±S.D.	16.9	18.8	19.7	30.1	28.1	20.5	26.7	25.0

a - No evidence of copulation
b - Gestation body weights not included in calculation of mean
d - Unable to confirm pregnancy status due to early gestation day at time of death, value(s) excluded from calculations
S.D. - Standard deviation

168

Individual and Group Mean Maternal Body Weights
During Gestation and Lactation - F_{1b}

Test Article, Dosage Level, Dam Number	Actual Body Weight (grams)							
	Day of Gestation				Day of Lactation			
	0	7	13	20	0	7	14	21
Elemental Phosphorus, 0.015 mg/kg/day:								
18022	277	298	317	401	310	340	352	316
18023	290	318	337	429	356	338	353	336
18024	319	324	342	405	351	348	355	348
18025[b]	289	314	323	315	Did not deliver			
18026[b]	263	290	284	275	Did not deliver			
18027	283	303	316	397	318	328	326	313
18028	265	290	315	374	301	333	333	334
18029[b]	255	260	262	262	Did not deliver			
18030	a				Did not deliver			
18031	326	331	346	388	352	356	341	338
18032	288	315	332	386	351	339	337	306
18033[b]	252	257	266	262	Did not deliver			
18034	302	323	343	392	303	327	318	304
18035	297	316	336	416	349	349	374	342
18036	312	326	336	370	369	347	347	345
18037	282	297	308	348	320	312	316	313
18038	305	314	330	416	322	351	336	325
18039[b]	303	304	302	302	Did not deliver			
18040	308	326	350	438	360	364	361	341
18041[b]	355	361	358	360	Did not deliver			
18042	280	302	311	371	303	325	319	300
18043[b]	291	291	296	295	Did not deliver			
18044	285	294	310	380	328	331	330	320
18045	291	304	326	401	303	321	323	334
18046	273	280	293	333	308	310	309	305
18047	297	318	333	402	c	337	325	339
18048	275	293	313	377	325	325	316	315
18049	Died prior to F_{1b} mating							
18050	316	327	347	418	332	343	336	318
18051	a				Did not deliver			
Mean	294	310	327	392	330	336	335	325
±S.D.	16.8	14.7	15.8	26.0	22.5	14.2	17.3	15.4

a - No evidence of copulation
b - Gestation body weights not included in calculation of mean
c - Lactation day 0 body weight inadvertently not recorded
S.D. - Standard deviation

169

Individual and Group Mean Maternal Body Weights
During Gestation and Lactation - F_{1b}

Test Article, Dosage Level, Dam Number	Actual Body Weight (grams)							
	Day of Gestation				Day of Lactation			
	0	7	13	20	0	7	14	21
Elemental Phosphorus, 0.075 mg/kg/day:								
18067[d]	266	Died gestation day 5						
18068[b]	301	306	306	308	Did not deliver			
18069	307	336	353	378	350	351	349	351
18070	270	287	301	361	312	303	319	301
18071	Died prior to F_{1b} mating							
18072	287	307	317	361	337	334	332	325
18073	Died prior to F_{1b} mating							
18074	248	258	272	334	Died gestation day 22			
18075	269	288	308	368	287	296	309	302
18076	Died prior to F_{1b} mating							
18077	289	313	329	413	315	318	327	Died lactation day 18
18078	314	334	359	431	353	364	362	339
18079	293	324	347	421	Died gestation day 22			
18080	326	343	365	438	366	347	357	Died lactation day 17
18081	280	314	339	416	Died gestation day 21			
18082	Died prior to F_{1b} mating							
18083	300	317	333	415	328	328	347	314
18084	275	287	304	375	Died gestation day 22			
18085	279	299	316	377	350	338	351	335
18086[b]	310	341	343	336	Did not deliver			
18087	301	320	332	407	Died gestation day 22			
18088	a				Did not deliver			
18089	359	377	393	474	383	362	353	334
18090	278	298	306	386	Died gestation day 22			
18091	297	320	330	406	316	345	349	327
18092[b]	301	322	307	307	Did not deliver			
18093	Died prior to F_{1b} mating							
18094	Died prior to F_{1b} mating							
18095	Died prior to F_{1b} mating							
18096[b]	297	295	301	301	Did not deliver			
Mean	292	313	330	398	336	335	341	325
±S.D.	25.4	27.0	28.8	34.7	27.7	22.3	17.0	16.9

a - No evidence of copulation
b - Gestation body weights not included in calculation of mean
d - Unable to confirm pregnancy status due to early gestation day at time of death, value(s) excluded from calculations
S.D. - Standard deviation

APPENDIX E

Individual Litter Data

F_{1a} Individual Litter Data

Dosage Level, Dam Number	First Male Used	Second Male Used	Gestation Length (Days)	No. Pups Dead On Day 0	Number Live Pups on Lactation Day 0	4 (Before Reduction)	4 (After Reduction)	7	14	21 Male	21 Female	Mean Weight (grams) of Live Pups on Lactation Day 0	4 (Before Reduction)	4 (After Reduction)	7	14	21 Male	21 Female
0 mg/kg/day (Control):																		
17932	17917	-	Did not deliver															
17933	17917	-	22	1	13	13	10	10	9	5	4	6.2	9.4	9.5	15.3	31.3	44.3	42.1
17934	17918	-	22	0	18	17	10	10	10	5	5	5.2	7.8	7.6	13.2	28.0	38.2	37.8
17935	17918	-	22	0	8	8	8	8	8	3	5	6.8	11.5	11.5	17.6	32.2	45.1	45.6
17936	17919	-	22	4	8	8	8	8	8	4	4	6.0	10.7	10.7	15.0	28.5	41.3	39.9
17937	17919	-	22	1	13	13	10	10	10	5	5	6.2	9.7	9.8	16.0	27.8	44.0	44.9
17938	17920	-	22	0	10	10	10	10	10	4	6	5.9	9.2	9.2	13.8	25.2	40.7	37.9
17939	17920	-	22	0	15	15	10	10	10	5	5	5.4	9.4	9.5	15.2	29.0	43.8	43.8
17940	17921	-	Did not deliver															
17941	17921	-	Did not deliver															
17942	17922	-	Did not deliver															
17943	17922	-	22	0	16	16	10	9	9	4	5	5.8	8.8	8.7	14.8	30.5	49.7	43.8
17944	17923	-	Did not deliver															
17945	17923	-	Did not deliver															
17946	17924	-	22	0	13	13	10	10	10	5	5	5.8	10.2	10.0	15.5	30.2	42.4	39.6
17947	17924	-	22	0	16	15	10	10	10	5	5	5.9	10.0	9.9	16.5	30.7	46.0	44.9
17948	17925	-	23	0	10	10	10	10	10	4	6	7.1	12.6	12.6	16.0	27.7	48.2	45.3
17949	17925	-	22	1	12	12	10	10	10	3	7	5.1	8.7	8.7	14.1	28.1	39.9	37.0
17950	17926	-	22	0	18	18	10	10	10	5	5	5.8	8.3	8.3	15.4	28.6	43.9	39.3
17951	17926	-	Did not deliver															
17952	17927	-	Did not deliver															
17953[a]	17927	17917	Did not deliver															
17954	17928	-	23	0	3	3	3	3	3	2	1	7.0	13.0	13.0	19.6	38.4	62.1	59.6
17955	17928	-	Died gestation day 13 (gravid)															
17956	17929	-	Did not deliver															
17957	17929	-	Did not deliver															
17958[a]	17930	17918	Did not deliver															
17959	17930	-	22	0	3	3	3	3	3	1	2	6.5	10.3	10.3	15.9	30.8	45.2	45.1
17960	17931	-	22	0	13	13	10	10	10	6	4	6.0	9.5	9.4	14.4	24.3	39.1	38.7
17961	17931	-	22	0	10	10	10	10	10	4	6	6.5	9.9	9.9	14.0	26.2	45.4	42.6
Total	-	-	-	7	199	197	152	151	150	150		-	-	-	-	-	-	-
Mean	-	-	22.1	0.4	11.7	11.6	8.9	8.9	8.8	8.8		6.1	9.9	9.9	15.4	29.3	44.7	42.8
±S.D.	-	-	0.33	1.00	4.48	4.35	2.33	2.32	2.30	2.30		0.58	1.40	1.42	1.53	3.18	5.44	5.26

[a]No evidence of copulation
- Not applicable
S.D. - Standard deviation

F_{1a} Individual Litter Data

Test Article, Dosage Level, Dam Number	First Male Used	Second Male Used	Gestation Length (Days)	No. Pups Dead On Day 0	Number Live Pups on Lactation Day 0	4 Before Reduction	4 After Reduction	7	14	21 Male	21 Female	Mean Weight (grams) of Live Pups on Lactation Day 0	4 Before Reduction	4 After Reduction	7	14	21 Male	21 Female
Elemental Phosphorus, 0.005 mg/kg/day:																		
17977	17962	-	Did not deliver															
17978	17962	-	Did not deliver															
17979	17963	-	23	0	10	10	10	10	10	6	4	6.6	10.7	10.7	15.1	27.0	38.9	36.9
17980	17963	-	23	0	12	12	10	10	10	5	5	6.1	9.9	10.0	15.4	28.1	41.5	49.2
17981[a]	17964	17962	Did not deliver															
17982	17964	-	22	0	14	14	10	10	10	5	5	6.3	9.8	10.0	16.5	31.5	45.9	42.8
17983	17965	-	23	0	3	3	3	3	3	1	2	7.0	12.8	12.8	18.8	33.3	50.8	49.7
17984	17965	-	23	0	5	5	5	5	5	2	3	7.6	13.6	13.6	20.5	37.5	52.5	55.7
17985	17966	-	22	0	12	12	10	10	10	5	5	5.7	9.6	9.4	15.2	30.6	45.4	44.9
17986	17966	-	23	0	15	15	10	10	10	6	4	5.8	10.0	9.9	16.5	31.0	49.9	43.9
17987	17967	-	22	0	11	10	10	10	9	3	6	6.3	10.7	10.7	16.1	26.8	42.4	40.3
17988	17967	-	22	0	15	14	10	10	10	5	5	5.5	9.1	9.1	14.4	26.6	37.8	36.8
17989	17968	-	23	0	12	12	10	10	10	4	6	6.3	10.5	10.4	16.1	29.9	42.4	42.6
17990	17968	-	22	0	14	14	10	10	10	5	5	5.7	8.7	8.6	14.4	27.9	44.9	42.4
17991	17969	17963[b]	22	1	10	10	10	10	10	3	7	6.1	10.8	10.8	15.8	29.3	41.7	41.8
17992	17969	17963[b]	23	0	6	6	6	6	6	4	2	6.9	13.2	13.2	18.7	33.3	57.7	52.2
17993	17970	-	22	0	9	9	9	8	8	4	4	7.2	12.2	12.2	18.1	33.5	43.3	46.2
17994	17970	-	23	0	2	2	2	2	2	1	1	7.2	12.4	12.4	18.2	28.0	40.3	42.9
17995	17971	-	22	1	10	10	10	10	10	4	6	5.7	10.5	10.5	14.8	26.0	41.5	39.0
17996	17971	-	23	0	10	10	10	10	10	5	5	7.2	13.1	13.1	18.5	31.6	48.8	46.1
17997	17965	-	22	1	10	9	9	9	9	4	5	6.4	11.5	11.5	16.5	28.2	42.9	42.1
17998	17965	-	Did not deliver															
17999	17973	-	Did not deliver															
18000	17973	-	23	2	10	10	10	10	10	3	7	6.9	11.0	11.0	16.2	20.5	48.8	46.9
18001	17974	-	23	0	11	11	10	10	10	5	5	7.4	12.6	12.6	18.9	33.1	50.5	50.0
18002	17974	-	23	2	13	11	10	10	10	4	6	6.3	8.9	8.6	15.4	27.0	37.9	37.2
18003	17975	17966	Did not deliver															
18004	17975	-	22	1	13	13	10	10	10	5	5	5.7	8.4	8.3	14.4	27.2	38.6	37.5
18005	17976	-	Did not deliver															
18006	17976[b]	17967	-	0	9	9	9	9	9	6	3	6.4	9.7	9.7	13.9	27.9	39.8	39.5
Total	-	-	-	8	236	231	203	202	201	201		-	-	-	-	-	-	-
Mean	-	-	22.5	0.3	10.5	10.0	8.8	8.8	8.7	8.7		6.4	10.9	10.8	16.4	29.7	44.5	43.8
S.D.	-	-	0.51	0.65	3.49	3.39	2.39	2.39	2.38	2.38		0.62	1.55	1.59	1.90	2.94	5.29	5.14

[a] No evidence of copulation
[b] Pregnancy attributed to this male
- Not applicable
S.D. - Standard deviation

F_{1a} Individual Litter Data

Test Article, Dosage Level, Dam Number	First Male Used	Second Male Used	Gestation Length (Days)	No. Pups Dead On Day 0	Number Live Pups on Lactation Day							Mean Weight (grams) of Live Pups on Lactation Day						
					0	4		7	14	21		0	4		7	14	21	
						Reduction							Reduction					
						Before	After			Male	Female		Before	After			Male	Female
Elemental Phosphorus, 0.015 mg/kg/day:																		
18022	18007	-	22	0	12	12	10	10	10	5	5	6.4	10.5	10.5	15.6	30.3	46.6	46.8
18023	18007	-	22	0	13	13	10	10	10	5	5	5.9	8.9	8.7	15.1	25.2	37.9	37.5
18024	18008	-	Did not deliver															
18025	18008	-	Did not deliver															
18026	18009	-	22	0	14	14	10	10	10	5	5	5.9	9.7	9.8	14.2	27.0	45.1	43.5
18027	18009	-	22	0	14	14	10	10	10	5	5	6.0	9.2	9.0	13.7	26.4	41.2	40.5
18028	18010	18007[b]	23	0	12	12	10	10	10	6	4	6.8	10.4	10.4	14.4	27.9	44.7	46.9
18029	18010	-	Did not deliver															
18030	18011	-	Did not deliver															
18031	18011	-	22	0	9	9	9	9	9	4	5	6.4	11.3	11.3	16.2	29.4	43.8	40.4
18032	18012	-	Did not deliver															
18033	18012	-	Did not deliver															
18034[a]	18013	18008	Did not deliver															
18035	18013	-	22	1	13	13	10	10	10	5	5	6.2	12.1	11.9	15.9	32.3	45.0	43.6
18036	18014	-	22	0	12	12	10	10	10	5	5	6.2	9.9	9.8	14.4	26.4	39.7	37.4
18037	18014	-	22	0	17	17	10	10	10	5	5	5.4	8.2	8.2	14.8	28.1	38.7	37.5
18038	18015	18009	Did not deliver															
18039	18015	-	23	1	13	13	10	10	10	5	5	6.7	11.6	11.6	18.0	32.1	48.8	48.2
18040	18016	-	22	1	15	12	10	10	10	5	5	6.1	10.8	10.7	17.6	32.1	51.4	50.6
18041[a]	18016	18011	Did not deliver															
18042	18017	-	23	0	9	9	9	9	9	3	6	6.5	10.9	10.9	15.5	25.4	44.2	39.7
18043	18017	-	23	0	12	12	10	10	10	5	5	7.0	11.0	11.0	15.7	30.5	49.2	48.0
18044	18018	-	22	0	11	11	10	10	10	5	5	5.8	8.8	9.0	12.9	26.1	37.3	39.1
18045	18018	-	22	0	15	15	10	10	10	5	5	6.0	10.5	10.6	14.9	27.8	42.6	43.1
18046	18019	-	23	0	11	11	10	10	10	5	5	6.8	11.7	11.7	16.9	30.5	44.4	43.1
18047	18019	18012[b]	22	0	15	15	10	10	10	5	5	5.6	8.7	8.7	13.6	27.5	45.9	41.8
18048	18020	-	22	0	13	13	10	10	10	5	5	5.9	9.3	9.3	14.7	27.5	42.0	39.7
18049[d]	18020	-	22	0	14	7	7	c	-	-	-	5.2	6.4	6.4	-	-	-	-
18050	18021	-	Did not deliver															
18051	18021	18018	Did not deliver															
Total	-	-	-	3	244	234	185	178	178	178		-	-	-	-	-	-	-
Mean	-	-	22.3	0.2	12.8	12.3	9.7	9.9	9.9	9.9		6.1	10.0	10.0	15.2	28.5	43.8	42.6
S.D.	-	-	0.45	0.37	2.03	2.33	0.75	0.32	0.32	0.32		0.49	1.42	1.41	1.36	3.33	3.91	4.07

[a] No evidence of copulation
[b] Pregnancy attributed to this male
[c] All viable pups sacrificed after death of their dam
[d] Died lactation day 6
- Not applicable
S.D. - Standard deviation

F_{1a} Individual Litter Data

Test Article, Dosage Level, Dam Number	First Male Used	Second Male Used	Gestation Length (Days)	No. Pups Dead On Day 0	Number Live Pups on Lactation Day 0	4 Reduction Before	4 Reduction After	7	14	21 Male	21 Female	Mean Weight (grams) of Live Pups on Lactation Day 0	4 Reduction Before	4 Reduction After	7	14	21 Male	21 Female
Elemental Phosphorus, 0.075 mg/kg/day:																		
18067	18052	-	22	0	5	5	5	5	5	3	2	6.5	10.8	10.8	14.6	25.9	37.1	37.3
18068[a]	18052	18053	Did not deliver															
18069	18053	-	Did not deliver															
18070	18053	-	22	0	12	12	10	10	10	5	5	5.9	9.7	9.7	14.8	28.2	43.3	44.5
18071	18054	-	Died gestation day 22 (gravid)															
18072	18054	-	23	8	2	2	2	2	2	1	1	5.8	11.1	11.1	17.8	36.3	54.1	52.5
18073	18055	-	Died gestation day 21 (gravid)															
18074	18055	-	22	0	12	12	10	10	10	6	4	5.7	8.8	8.8	12.8	26.5	42.5	40.6
18075	18056	-	Did not deliver															
18076	18056	-	Died gestation day 22 (gravid)															
18077	18057	-	22	0	8	8	8	8	8	3	5	6.8	10.4	10.4	15.1	28.7	46.3	45.0
18078	18057	-	22	1	13	13	10	10	10	5	5	5.9	10.1	10.1	16.4	31.4	43.2	43.1
18079	18058	-	22	2	10	10	10	10	10	4	6	6.4	10.2	10.2	14.8	29.4	44.2	43.4
18080[a]	18058	18054	Did not deliver															
18081	18059	-	23	6	7	7	7	7	7	4	3	6.9	12.7	12.7	18.5	35.8	59.4	50.6
18082	18059	-	Died gestation day 22 (gravid)															
18083	18060	-	23	0	7	7	7	7	7	1	6	7.3	13.0	13.0	18.9	32.6	53.2	48.3
18084	18060	-	23	2	7	7	7	7	7	1	6	6.2	11.9	11.9	17.7	33.7	53.7	51.5
18085	19061	-	22	0	7	7	7	7	7	4	3	6.6	11.0	11.0	16.4	32.4	49.6	48.5
18086[a]	18061	18055	Did not deliver															
18087	18062	-	22	0	12	12	10	10	10	5	5	6.1	9.3	9.2	12.8	27.4	44.7	43.5
18088	18062	-	Did not deliver															
18089[a]	18063	18056	Did not deliver															
18090	18063	-	23	0	10	10	10	10	10	2	8	6.9	11.4	11.4	17.3	30.7	52.6	47.5
18091	18064	-	22	0	14	14	10	10	10	5	5	5.7	9.2	9.1	14.6	29.2	45.4	43.6
18092[a]	18064	18057	Did not deliver															
18093	18065	-	Died gestation day 21 (gravid)															
18094	18065	-	Died gestation day 22 (gravid)															
18095	18066	-	Died gestation day 22 (gravid)															
18096	18066	18060	Did not deliver															
Total	-	-	-	19	126	126	113	113	113	113		-	-	-	-	-	-	-
Mean	-	-	22.4	1.4	9.0	9.0	8.1	8.1	8.1	8.1		6.3	10.7	10.7	15.9	30.6	47.8	45.7
±S.D.	-	-	0.50	2.53	3.42	3.42	2.43	2.43	2.43	2.43		0.51	1.27	1.29	1.98	3.27	6.07	4.31

[a]No evidence of copulation
- Not applicable
S.D. - Standard deviation

F_{1b} Individual Litter Data

Dosage Level, Dam Number	First Male Used	Second Male Used	Gestation Length (Days)	No. Pups Dead On Day 0	Number Live Pups on Lactation Day							Mean Weight (grams) of Live Pups on Lactation Day						
					0	4		7	14	21		0	4		7	14	21	
						Reduction							Reduction					
						Before	After			Male	Female		Before	After			Male	Female
0 mg/kg/day (Control):																		
17932	17930	-	22	1	10	10	10	10	10	5	5	6.4	10.1	10.1	14.5	27.9	42.7	41.5
17933	17931	-	22	0	11	11	10	10	10	5	5	6.5	10.7	10.8	17.5	32.6	47.9	47.3
17934	17931	-	Died gestation day 22 (gravid)															
17935	17925	-	22	1	11	11	10	10	10	2	8	6.5	10.7	10.8	16.5	30.2	45.2	44.6
17936	17917	-	23	0	12	12	10	10	10	5	5	6.0	10.4	10.3	15.1	27.9	47.0	45.2
17937	17917	-	22	0	12	12	10	10	10	5	5	6.2	10.9	10.9	17.0	31.5	47.9	45.4
17938	17918	-	21	0	12	12	10	10	10	5	5	5.6	8.2	8.2	13.4	27.4	37.8	37.4
17939	17918	-	23	0	8	8	8	8	8	5	3	7.3	14.3	14.3	20.3	36.3	57.5	53.6
17940[B]	17919	-	22	0	12	12	10	10	10	c	c	6.6	10.3	10.3	16.8	32.3	-	-
17941	17919	-	22	1	11	11	10	10	10	5	5	6.2	10.6	10.6	15.5	27.8	44.1	40.0
17942	17920	-	23	0	12	12	10	10	10	5	5	6.1	9.9	9.9	16.0	30.2	50.9	46.3
17943	17920	-	22	0	13	13	10	10	10	5	5	6.2	9.2	9.2	14.2	28.4	46.5	43.3
17944	17921	-	Did not deliver															
17945	17921	-	Did not deliver															
17946	17922	-	Did not deliver															
17947	17922	-	Did not deliver															
17948	17923	-	23	0	12	12	10	10	10	4	6	7.3	12.3	12.4	18.7	33.2	46.9	42.6
17949	17923	-	22	0	12	12	10	10	10	5	5	5.6	9.9	9.7	15.2	29.9	50.8	44.6
17950	17924	-	22	0	14	14	10	10	10	5	5	6.2	9.8	9.7	15.7	32.8	49.4	47.4
17951	17924	-	23	0	2	0	-	-	-	-	-	5.5	-	-	-	-	-	-
17952			Died prior to F_{1b} mating															
17953	17925	-	23	1	8	8	8	8	8	7	1	7.4	13.0	13.0	18.4	34.0	52.6	51.0
17954	17926	-	23	0	13	13	10	10	10	5	5	6.6	11.5	11.5	18.3	32.3	52.2	49.7
17955			Died prior to F_{1b} mating															
17956	17926	-	22	1	8	8	8	8	8	4	4	6.2	10.3	10.3	14.2	28.5	45.0	44.0
17957	17928	-	Did not deliver															
17958	17928	17917	Did not deliver															
17959	17929	-	22	0	12	12	10	10	10	5	5	6.0	10.3	10.2	15.2	30.3	49.4	47.4
17960	17929	-	Did not deliver															
17961	17930	-	22	0	15	15	10	10	10	6	4	6.1	8.6	8.5	13.7	28.0	44.0	39.9
Total	-	-	-	5	220	218	184	184	184	174		-	-	-	-	-	-	-
Mean	-	-	22.3	0.3	11.0	10.9	9.7	9.7	9.7	9.7		6.3	10.6	10.6	16.1	30.6	47.7	45.1
±S.D.	-	-	0.57	0.44	2.81	3.16	0.75	0.75	0.75	0.77		0.55	1.43	1.46	1.88	2.54	4.42	4.07

[C] All pups sacrificed following death of their dam
[B] Died lactation day 18
- Not applicable
S.D. - Standard deviation

F_{1b} Individual Litter Data

Test Article, Dosage Level, Dam Number	First Male Used	Second Male Used	Gestation Length (Days)	No. Pups Dead On Day 0	Number Live Pups on Lactation Day 0	4 (Before Reduction)	4 (After Reduction)	7	14	21 Male	21 Female	Mean Weight (grams) of Live Pups on Lactation Day 0	4 (Before Reduction)	4 (After Reduction)	7	14	21 Male	21 Female
Elemental Phosphorus, 0.005 mg/kg/day:																		
17977	17976	-	Did not deliver															
17978	17976	-	23	1	4	4	4	4	4	3	1	7.0	12.5	12.5	18.6	33.5	55.2	44.8
17979	17962	-	Did not deliver															
17980	17967	-	23	0	14	14	10	10	10	5	5	6.1	10.3	10.3	16.0	29.0	49.7	45.7
17981	17963	-	Did not deliver															
17982[a]	17968	17962	Did not deliver															
17983	17962	-	Died gestation day 1[f]															
17984	17962	-	Did not deliver															
17985	17963	-	21	0	14	14	10	10	10	5	5	5.2	8.6	8.6	14.7	29.7	42.8	40.1
17986	17963	-	22	4	8	8	8	8	8	4	4	6.0	10.9	10.9	17.0	34.0	52.2	53.2
17987	17965	-	22	0	14	13	10	10	10	5	5	6.1	10.1	10.3	15.5	32.4	50.5	47.0
17988	17965	-	22	0	16	16	10	10	10	5	5	5.9	9.1	9.0	15.0	28.2	45.4	43.8
17989	17966	-	Did not deliver															
17990	17966	-	22	0	2	2	2	2	2	1	1	6.4	8.4	8.4	10.7	13.9	24.2	25.2
17991	17967	-	22	0	9	8	8	8	8	3	5	6.5	11.7	11.7	18.2	34.9	56.0	51.5
17992	17967	-	22	0	9	9	9	9	9	6	3	7.1	11.2	11.2	17.2	30.1	47.3	44.5
17993	17968	-	Did not deliver															
17994	17968	-	22	0	4	4	4	4	4	1	3	6.6	12.6	12.6	19.6	34.7	59.1	52.3
17995	17969	-	21	0	14	13	10	10	10	6	4	5.0	7.9	8.0	12.4	26.5	41.7	38.5
17996	17969	-	22	0	10	10	10	10	10	5	5	6.3	11.7	11.7	16.7	31.5	50.8	48.5
17997	17970	-	23	0	5	5	5	5	5	2	3	7.3	14.0	14.0	20.1	36.8	62.3	60.6
17998	17970	-	23	0	6	6	6	6	6	3	3	7.4	13.9	13.9	19.7	34.7	54.3	53.3
17999[a]	17971	-	Did not deliver															
18000	17971	-	21	0	13	13	10	10	10	5	5	5.6	8.2	8.3	13.0	28.9	43.6	40.2
18001	17973	-	23	0	13	13	10	10	10	5	5	6.7	12.5	12.5	19.3	34.2	53.5	53.1
18002	17973	-	22	1	15	15	10	9	9	4	5	5.9	8.8	8.8	14.6	32.1	45.4	45.6
18003	17974	-	Did not deliver															
18004	17974	-	22	2	11	11	10	10	10	7	3	6.0	9.7	9.8	15.2	29.0	43.5	44.8
18005[a]	17975	17965	Did not deliver															
18006	17975	-	22	0	10	10	10	10	10	5	5	5.9	10.0	10.0	15.7	29.8	47.1	43.7
Total	-	-	-	8	191	188	156	155	155	155		-	-	-	-	-	-	-
Mean	-	-	22.1	0.4	10.1	9.9	8.2	8.2	8.2	8.2		6.3	10.6	10.7	16.3	30.7	48.8	46.1
±S.D.	-	-	0.66	1.02	4.26	4.19	2.64	2.61	2.61	2.61		0.66	1.91	1.89	2.61	4.95	8.20	7.52

[a]No evidence of copulation
[f]Unable to confirm pregnancy status due to early gestation day at time of death
- Not applicable
S.D. - Standard deviation

F_{1b} Individual Litter Data

Test Article, Dosage Level, Dam Number	First Male Used	Second Male Used	Gestation Length (Days)	No. Pups Dead On Day 0	Number Live Pups on Lactation Day 0	4 (Reduction Before)	4 (Reduction After)	7	14	21 Male	21 Female	Mean Weight (grams) of Live Pups on Lactation Day 0	4 (Reduction Before)	4 (Reduction After)	7	14	21 Male	21 Female
Elemental Phosphorus, 0.015 mg/kg/day:																		
18022	18020	-	22	0	14	14	10	10	10	4	6	5.7	9.3	9.3	15.1	30.4	46.3	44.1
18023	18021	-	21	1	12	12	10	10	10	7	3	5.6	8.6	8.6	14.3	29.2	45.4	42.5
18024	18007	-	22	2	8	8	8	8	8	5	5	5.9	10.1	10.1	16.3	30.5	53.1	45.6
18025	18007	-	Did not deliver															
18026	18008	-	Did not deliver															
18027	18008	-	22	0	13	13	10	10	10	5	5	5.9	10.3	10.1	15.7	29.5	46.7	44.3
18028	18009	-	22	0	11	11	10	10	10	6	4	5.3	9.4	9.4	15.3	30.2	47.2	47.4
18029	18009	-	Did not deliver															
18030[a]	18010	18007	Did not deliver															
18031	18010	18008[b]	22	0	8	8	8	8	8	3	5	6.2	11.3	11.3	16.7	32.0	50.6	50.0
18032	18011	-	27	1	5	5	5	5	5	3	2	6.7	12.2	12.2	18.5	33.7	50.6	47.9
18033	18011	-	Did not deliver															
18034	18012	-	22	1	12	12	10	10	10	5	5	5.4	9.7	9.6	15.5	28.0	48.4	42.8
18035	18012	-	22	1	12	12	10	10	10	5	5	5.6	10.5	10.3	16.6	32.2	50.5	49.6
18036	18013	-	22	0	3	3	3	3	3	0	3	6.9	13.1	13.1	19.5	35.0	-	51.6
18037	18013	-	22	0	7	7	7	7	7	4	3	6.5	11.7	11.7	17.6	33.2	51.4	48.7
18038	18014	-	22	0	14	14	10	10	10	5	5	6.1	9.9	10.0	15.2	30.6	45.6	45.2
18039	18014	-	Did not deliver															
18040	18015	-	21	1	12	11	10	10	10	5	5	5.7	9.5	9.4	15.6	31.3	48.0	49.1
18041	18015	18009	Did not deliver															
18042	18016	-	23	0	9	9	9	9	9	3	5	6.9	10.9	10.9	15.8	28.9	49.3	45.8
18043	18016	-	Did not deliver															
18044	18017	-	22	1	10	10	10	10	10	5	5	6.1	10.9	10.9	15.5	28.9	44.2	43.6
18045	18017	-	23	0	12	12	10	10	10	5	5	7.3	12.2	12.3	17.0	29.9	48.7	47.2
18046	18018	-	22	0	6	6	6	6	6	2	4	6.5	12.2	12.2	17.8	34.5	52.4	51.9
18047	18018	-	22	2	10	10	10	10	10	5	5	6.7	10.6	10.6	16.0	28.6	46.9	44.5
18048	18019	-	22	0	11	10	10	10	10	5	5	6.2	10.6	10.6	15.2	28.4	44.2	40.6
18049			Died prior to F_{1b} mating															
18050	18019	18011	23	0	12	12	10	10	10	5	5	6.2	10.0	10.1	16.6	30.2	49.0	48.8
18051[a]	18020	18012	Did not deliver															
Total	-	-	-	10	201	199	176	176	176	175		-	-	-	-	-	-	-
Mean	-	-	22.1	0.5	10.1	10.0	8.8	8.8	8.8	8.8		6.2	10.7	10.6	16.3	30.8	48.3	46.6
±S.D.	-	-	0.51	0.69	3.03	3.00	2.04	2.04	2.04	2.04		0.55	1.17	1.19	1.28	2.06	2.64	3.14

[a] No evidence of copulation
[b] Pregnancy attributed to this male
- Not applicable
S.D. - Standard deviation

F_{1b} Individual Litter Data

Test Article, Dosage Level, Dam Number	First Male Used	Second Male Used	Gestation Length (Days)	No. Pups Dead On Day 0	Number Live Pups on Lactation Day 0	4 (Before Reduction)	4 (After Reduction)	7	14	21 Male	21 Female	Mean Weight (grams) of Live Pups on Lactation Day 0	4 (Before Reduction)	4 (After Reduction)	7	14	21 Male	21 Female
Elemental Phosphorus, 0.075 mg/kg/day:																		
18067	18063	-	Died gestation day 5[f]															
18068	18064	-	Did not deliver															
18069	18065	-	23	0	2	2	2	2	2	0	2	7.5	13.4	13.4	19.3	36.5	-	56.5
18070	18066	-	21	0	11	11	10	10	9	4	5	5.0	7.9	7.8	12.0	23.9	35.2	38.5
18071	-		Died prior to F_{1b} mating															
18072	18052	-	22	0	5	5	5	5	5	2	3	6.2	10.9	10.9	17.3	33.4	52.1	48.8
18073	-		Died prior to F_{1b} mating															
18074	18052	-	Died gestation day 22 (gravid)															
18075	18053	-	22	1	11	10	10	10	10	6	4	5.9	9.2	9.2	12.6	23.2	37.2	33.4
18076	-		Died prior to F_{1b} mating															
18077[e]	18053	-	22	3	10	10	10	10	10	c	c	6.1	10.0	10.0	15.0	27.6	-	-
18078	18054	-	22	1	12	12	10	10	10	5	5	6.1	11.0	10.9	17.6	33.0	50.6	46.6
18079	18054	-	Died gestation day 22 (gravid)															
18080[g]	18055	-	22	1	12	12	10	10	10	c	c	5.4	8.5	8.6	11.8	23.8	-	-
18081	18055	-	Died gestation day 21 (gravid)															
18082	-		Died prior to F_{1b} mating															
18083	18056	-	22	3	8	8	8	8	8	6	2	6.4	11.4	11.4	16.6	29.5	45.3	42.6
18084	18056	-	Died gestation day 22 (gravid)															
18085	18057	-	21	0	8	8	8	8	8	6	2	5.6	9.7	9.7	15.3	30.7	46.9	45.7
18086	18057	-	Did not deliver															
18087	18058	-	Died gestation day 22 (gravid)															
18088[a]	18058	18052	Did not deliver															
18089	18059	-	23	0	13	13	10	10	10	5	5	6.5	11.1	11.1	17.0	27.0	46.0	43.3
18090	18059	-	Died gestation day 22 (gravid)															
18091	18060	-	22	0	13	13	10	10	10	5	5	5.9	10.2	10.1	15.6	30.5	46.4	46.0
18092	18061	-	Did not deliver															
18093	-		Died prior to F_{1b} mating															
18094	-		Died prior to F_{1b} mating															
18095	-		Died prior to F_{1b} mating															
18096	18062	18053	Did not deliver															
Total	-	-	-	9	105	104	93	93	92	72		-	-	-	-	-	-	-
Mean	-	-	22.0	0.8	9.5	9.5	8.5	8.5	8.4	8.0		6.1	10.3	10.3	15.5	29.0	45.0	44.6
±S.D.	-	-	0.63	1.17	3.50	3.47	2.66	2.66	2.62	2.78		0.65	1.52	1.52	2.45	4.35	5.92	6.47

[c] All pups sacrificed following death of their dam
[e] Died lactation day 18
[f] Unable to determine pregnancy status due to early gestation day at time of death
[g] Died lactation day 17
- Not applicable
S.D. - Standard deviation

APPENDIX F

Individual Uterine Examination Data

190

Individual Uterine Examination Data

Dosage Level Dam Number	Total Implantation Sites At Necropsy	Number of Pups Delivered F_{1a}	Number of Pups Delivered F_{1b}	Remaining Sites[a]
0 mg/kg/day (Control):				
17932	12	b	11	1
17933	17	14	11	-8
17934	-	18	Died (gravid, 17 total implants 4 delivered pups 12 normally developing implants, 1 early resorption)	-
17935	21	8	12	1
17936	23	12	12	-1
17937	27	14	12	1
17938	20	10	12	-2
17939	20	15	8	-3
17940	12	b	12	0
17941	13	b	12	1
17942	13	b	12	1
17943	30	16	13	1
17944	0	b	b	-
17945	0	b	b	-
17946	17	13	b	4
17947	14	16	b	-2
17948	19	10	12	-3
17949	25	13	12	0
17950	27	18	14	-5
17951	2	b	2	0
17952	0	b	Died	-
17953	10	b	9	1
17954	17	3	13	1
17955	-	Died (gravid, 14 implants)		
17956	10	b	9	1
17957	0	b	b	-
17958	0	b	b	-
17959	22	3	12	7
17960	15	13	b	2
17961	22	10	15	-3

[a]Total implantation sites minus total pups delivered
[b]Did not deliver
-Not applicable

189

Individual Uterine Examination Data

Test Article, Dosage Level, Dam Number	Total Implantation Sites At Necropsy	Number of Pups Delivered F_{1a}	Number of Pups Delivered F_{1b}	Remaining Sites[a]
Elemental Phosphorus, 0.005 mg/kg/day:				
17977	0	b	b	-
17978	5	b	5	0
17979	10	10	b	0
17980	18	12	14	-8
17981	0	b	b	-
17982	14	14	b	0
17983	4	3	Died[c]	1
17984	6	5	b	1
17985	14	12	14	-12
17986	23	15	12	-4
17987	25	11	14	0
17988	31	15	16	0
17989	14	12	b	2
17990	16	14	2	0
17991	19	11	9	-1
17992	16	6	9	1
17993	10	9	b	1
17994	5	2	4	-1
17995	22	11	14	-3
17996	14	10	10	-6
17997	17	11	5	1
17998	6	b	6	0
17999	0	b	b	-
18000	19	12	13	-6
18001	23	11	13	-1
18002	28	15	16	-3
18003	0	b	b	-
18004	16	14	13	-11
18005	0	b	b	-
18006	19	9	10	0

[a]Total implantation sites minus total pups delivered
[b]Did not deliver
[c]Number of implantations unavailable due to early gestation day
-Not applicable

182

Individual Uterine Examination Data

Test Article, Dosage Level, Dam Number	Total Implantation Sites At Necropsy	Number of Pups Delivered F_{1a}	Number of Pups Delivered F_{1b}	Remaining Sites[a]
Elemental Phosphorus, 0.015 mg/kg/day:				
18022	27	12	14	1
18023	25	13	13	-1
18024	12	b	10	2
18025	1	b	b	1
18026	14	14	b	0
18027	28	14	13	1
18028	23	12	11	0
18029	0	b	b	-
18030	0	b	b	-
18031	10	9	8	-7
18032	6	b	6	0
18033	0	b	b	-
18034	14	b	13	1
18035	30	14	13	3
18036	17	12	3	2
18037	24	17	7	0
18038	15	b	14	1
18039	14	15	b	-1
18040	28	16	13	-1
18041	0	b	b	-
18042	16	9	9	-2
18043	12	12	b	0
18044	21	11	11	-1
18045	24	15	12	-3
18046	17	11	6	0
18047	28	15	12	1
18048	25	13	11	1
18049	15	14	Died	1
18050	15	b	12	3
18051	0	b	b	-

[a]Total implantation sites minus total pups delivered
[b]Did not deliver
-Not applicable

183

Individual Uterine Examination Data

Test Article, Dosage Level, Dam Number	Total Implantation Sites At Necropsy	Number of Pups Delivered F_{1a}	Number of Pups Delivered F_{1b}	Remaining Sites[a]
Elemental Phosphorus, 0.075 mg/kg/day:				
18067	5	5	Died[c]	0
18068	0	b	b	-
18069	2	b	2	0
18070	20	12	11	-3
18071	-	Died (gravid, 10 implants)	-	-
18072	19	10	5	4
18073	-	Died (gravid, 15 implants)	-	-
18074	-	12	Died (gravid, 11 implants)	-
18075	13	b	12	1
18076	-	Died (gravid, 12 implants)	-	-
18077	19	8	13	-2
18078	24	14	13	-3
18079	-	12	Died (gravid, 14 implants)	-
18080	13	b	13	0
18081	-	13	Died (gravid, 16 implants)	-
18082	-	Died (gravid, 12 implants)	-	-
18083	20	7	11	2
18084	-	9	Died (gravid, 12 implants)	-
18085	19	7	8	4
18086	0	b	b	-
18087		12	Died (gravid, 13 implants)	-
18088	0	b	b	-
18089	15	b	13	2
18090		10	Died (gravid, 13 implants)	-
18091	25	14	13	-2
18092	0	b	b	-
18093	-	Died (gravid, 14 implants)	-	-
18094	-	Died (gravid, 14 implants)	-	-
18095	-	Died (gravid, 12 implants	-	-
18096	0	b	b	-

[a]Total implantation sites minus total pups delivered
[b]Did not deliver
[c]Number of implantations unavailable due to early gestation day
-Not applicable

APPENDIX G

Historical Control Data

IRDC REPRODUCTIVE HISTORICAL CONTROL DATA
Charles River CD® Rats

Sex, (When Applicable) Reproductive/Litter Parameter		Number	Value	Range
MALE				
Fertility Index	Fertile Males / Total Males Mated	407 / 432	94.2%	(80.0% - 100.0%)
FEMALE				
Fertility Index	No. of Females Pregnant / No. of Females Mated	926 / 1027	90.2%	(61.1% - 100.0%)
Gestation Length (Days)	Total No. of Days / No. of Pregnant Dams	16325 / 745	21.9	(21.6 - 22.4)
No. Implantation Sites at Weaning/Dam	Total No. of Implantation Sites / No. of Pregnant Dams	1064 / 73	14.6	(14.0 - 14.9)
Postimplantation Loss/Dam	No. of Implantation Sites at Weaning - Total No. Pups at Birth / No. of Implantation Sites	1064-989 / 1064	7.0%	(3.3% - 8.3%)
LITTER SIZE				
Viable Pups/Litter at Day 0	Total No. of Viable Pups / No. of Pregnant Dams	10832 / 860	12.6	(10.1 - 15.0)
Stillborn Pups/Litter	Total No. of Stillborn Pups / No. of Pregnant Dams	208 / 848	0.2	(0.0 - 1.4)
PUP SEX DISTRIBUTION AT WEANING	Total No. of Males: Total No. of Females	Total No. of Males: Total No. of Females 4451:4468	%Male:%Female 49.9:50.1	%Male:%Female - %Male:%Female (40.7:44.1 - 55.9:59.3)
PUP SURVIVAL AT BIRTH				
Gestation Survival Index	Total No. of Viable Pups at Birth / Total No. of Pups Born	10594 / 10791	98.2%	(89.3% - 100.0%)
PUP SURVIVAL INDICES THROUGH WEANING				
Lactation Day 4 (Before Reduction)	Total No. of Viable Pups on Day 4 (B.R.) / Total No. of Viable Pups on Day 0	5909 / 6013	98.3%	(95.7% - 100.0%)
Lactation Day 4 (No Reduction of Litter Size)	Total No. of Viable Pups on Day 4 / Total No. of Viable Pups on Day 0	3398 / 3438	98.8%	(95.3% - 100.0%)
Lactation Day 12	Total No. of Viable Pups on Day 12 / Total No. of Viable Pups on Day 4 (B.R.)	2768 / 2784	99.4%	(98.4% - 100.0%)

IRDC REPRODUCTIVE HISTORICAL CONTROL DATA
Charles River COBS® CD® Rats

Sex, (When Applicable) Reproductive/Litter Parameter		Number	Value	Range
Lactation Day 14	Total No. of Viable Pups on Day 14 / Total No. of Viable Pups on Day 4 (AR), 5 (AR) or 7	4898 / 4923	99.5%	(97.0% - 100.0%)
Lactation Day 21	Total No. of Viable Pups on Day 21 / Total No. of Viable Pups on Day 12 or 14	8910 / 8947	99.6%	(97.1% - 100.0%)
PUP BODY WEIGHT (g) AT BIRTH				
Male	Total Viable Male Pup Weight at Birth / Total No. of Viable Male Pups	1272.0 / 193	6.6 g	(6.4 g - 7.1 g)
Female	Total Viable Female Pup Weight at Birth / Total No. of Viable Female Pups	1197.9 / 192	6.2 g	(6.1 g - 6.8 g)
Litter Weight (Males and Females)	Total Mean Viable Litter Weight at Birth / Total No. of Litters	2669.8 / 415	6.4 g	(5.6 g - 7.4 g)
PUP BODY WEIGHT (g) THROUGH WEANING				
Lactation Day 4 (Before Reduction) Litter Weight (Males and Females)	Total Mean Viable Litter Weight on Day 4 (B.R.) / Total No. of Litters on Day 4 (B.R.)	4974.6 / 485	10.3 g	(9.2 g - 11.3 g)
Lactation Day 4 (After Reduction)				
Litter Weight (Males and Females)	Total Mean Viable Litter Weight on Day 4 (A.R.) / Total No. of Litters on Day 4 (A.R.)	3557.7 / 350	10.2 g	(9.2 g - 11.2 g)
Lactation Day 4 (No Reduction of (Litter Size)				
Male	Total Viable Male Pup Weight on Day 4 / Total No. Viable Male Pups on Day 4	2092 / 196	10.7 g	(9.2 g - 11.8 g)
Female	Total Viable Female Pup Weight on Day 4 / Total No. Viable Female Pups on Day 4	1975.8 / 196	10.1 g	(9.2 g - 11.5 g)
Litter Weight (Males and Females)	Total Mean Viable Litter Weight on Day 4 / Total No. of Litters on Day 4	644.6 / 61	10.6 g	(9.7 g - 11.5 g)
Lactation Day 7				
Male	Total Viable Male Pup Weight on Day 7 / Total No. Viable Male Pups on Day 7	738.9 / 47	15.7 g	(15.6 g - 15.8 g)
Female	Total Viable Female Pup Weight on Day 7 / Total No. Viable Female Pups on Day 7	704.6 / 47	15.0 g	(15.0 g - 15.0 g)
Litter Weight (Males and Females)	Total Mean Viable Litter Weight on Day 7 / Total No. Litters on Day 7	1840.3 / 124	14.8 g	(14.2 g - 15.9 g)
Lactation Day 12				
Male	Total Viable Male Pup Weight on Day 12 / Total No. Viable Male Pups on Day 12	3714.8 / 151	24.6 g	(22.3 g - 28.2 g)
Female	Total Viable Female Pup Weight on Day 12 / Total No. Viable Female Pups on Day 12	3553 / 151	23.5 g	(22.1 g - 27.3 g)
Litter Weight (Males and Females)	Total Mean Viable Litter Weight on Day 12 / Total No. Litters on Day 12	1459.0 / 61	23.9 g	(22.0 g - 25.6 g)

IRDC REPRODUCTIVE HISTORICAL CONTROL DATA
Charles River COBB® CD® Rats

Sex, (When Applicable) Reproductive/Litter Parameter		Number	Value	Range
Lactation Day 14				
Male	Total Viable Male Pup Weight on Day 14 / Total No. Viable Male Pups on Day 14	1030.4 / 47	27.7 g	(27.4 g - 28.0 g)
Female	Total Viable Female Pup Weight on Day 14 / Total No. Viable Female Pups on Day 14	126.5 / 47	26.9 g	(26.7 g - 27.1 g)
Litter	Total Mean Viable Litter Weight on Day 14 / Total No. Litters on Day 14	10333.2 / 353	29.3 g	(26.9 g - 34.3 g)
Lactation Day 21				
Male	Total Viable Male Pup Weight on Day 21 / Total No. Viable Male Pups on Day 21	38738 / 848	45.7 g	(39.1 g - 54.7 g)
Female	Total Viable Female Pup Weight on Day 21 / Total No. Viable Female Pups on Day 21	37503 / 851	44.1 g	(37.5 g - 52.6 g)

The historical control data compiled includes study data from the interval of April 17, 1977 to September 29, 1980 (20 studies)

APPENDIX H

Personnel Involved in the Study

The following list of people were responsible for the supervision of various phases of this study:

Dale Aldridge, B.S.	Unit Supervisor, Report Writing, Reproduction and Teratology
Stephen Allen, B.S.	Unit Supervisor, Test Material Control
Carol Bajo	Group Supervisor, Reproduction and Teratology
Malcolm Blair, Ph.D.	Director of Toxicology Division
Dixie K. Bushee, B.S.	Unit Supervisor, Test Material Control
Serena Cole, B.A.	Unit Supervisor, Reproduction and Teratology
Mark W. Griggs, B.S.	Group Supervisor, Test Material Control
Joan Honeysett, B.A.	Unit Supervisor, Reproduction and Teratology
Jacqueline M. Leng, B.S.	Report Writer, Reproduction and Teratology
Ward R. Richter, D.V.M. A.C.V.P.	Director of Pathology Division
James L. Schardein, M.S.	Director of Reproduction and Teratology
Colleen A. Schwartz	Assistant to the Director, Reproduction and Teratology
Yolanta Sochanek, B.S.	Unit Supervisor, Reproduction and Teratology
Roger Terry, B.S.	Group Supervisor, Reproduction and Teratology
Joseph H. Thorstenson, Ph.D	Director of Analytical Chemistry
Patrick E. Traster, B.S.	Director of Laboratory Services
Linda C. Uraih, D.V.M., M.S.	Staff Pathologist
Robert E. Vollmar, M.S.	Director of Statistics and Computer
R. John Weaver, M.S.	Biostatistician, Statistics and Computer

APPENDIX I

Individual Animal Data Record

191

Abbreviations Utilized on the Individual Animal Data Record

Tis. - Tissue

INDIVIDUAL ANIMAL DATA RECORD: PATHOLOGY
0 - Termination: Rats

GROUP, ANIMAL NUMBER	SEX	FATE[1]	TISSUE:	OBSERVATIONS:
0 mg/kg/day				
17917	M	S	MACROSCOPIC:	
			Liver	- Tan focus, 0.3 cm diameter, trace.
			MICROSCOPIC:	
			Adrenal, cortex	- Vacuolar change, generalized, bilateral, mild.
			Adrenal, medulla	- Within normal limits.
			Bone	- Within normal limits.
			Brain	- Within normal limits.
			Epididymis	- Within normal limits.
			Heart	- Within normal limits.
			Kidney	- Within normal limits.
			Liver	- Glycogen deposition, increased, generalized, trace.
				- bile ducts, inflammation, chronic, multifocal, trace.
			Lung	- Inflammation, chronic, multifocal, mild.
			Prostate	- Within normal limits.
			Seminal Vesicle	- Within normal limits.
			Stomach-Glandular	- Within normal limits.
			Stomach-Nonglandular	- Within normal limits.
			Testis	- Within normal limits.
17918	M	S	MACROSCOPIC:	
			Abdominal Cavity	- Firm, red, encapsulated mass, 2.0 x 1.0 x 0.5 cm, Mass A.
			MICROSCOPIC:	
			Adrenal, cortex	- Within normal limits.
			Adrenal, medulla	- Within normal limits.
			Bone	- Within normal limits.
			Brain	- Within normal limits.
			Epididymis	- Within normal limits.
			Heart	- Lymphocytic infiltration, focal, trace.
			Kidney	- Within normal limits.
			Liver	- Glycogen deposition, increased, generalized, mild.
			Lung	- Interstitial tissue, inflammation, chronic, multifocal, mild.
			Prostate	- Within normal limits.
			Seminal Vesicle	- Within normal limits.
			Soft Tis., Abdomen	- Inflammation, chronic, mild.
				- Hemorrhage, mild; involving abdominal fat tissue.
				- Mass A.

[1]FATE CODES: S=SCHEDULED SACRIFICE E=SACRIFICED IN EXTREMIS D=DIED ON STUDY

GROUP, ANIMAL NUMBER	SEX	FATE[1]	TISSUE:	OBSERVATIONS:
0 mg/kg/day				
17918	M	S	MICROSCOPIC: (CONTINUED)	
			Stomach-Glandular	- Within normal limits.
			Stomach-Nonglandular	- Within normal limits.
			Testis	- Within normal limits.
17920	M	S	MACROSCOPIC:	
			All Tissues	- Within normal limits.
			MICROSCOPIC:	
			Adrenal, cortex	- Vacuolar change, bilateral, trace.
			Adrenal, medulla	- Within normal limits.
			Bone	- Within normal limits.
			Brain	- Within normal limits.
			Epididymis	- Within normal limits.
			Heart	- Inflammation, chronic, multifocal, trace.
			Kidney	- Within normal limits.
			Liver	- Within normal limits.
			Lung	- bronchioles, inflammation, chronic, multifocal, mild.
			Prostate	- Within normal limits.
			Seminal Vesicle	- Within normal limits.
			Stomach-Glandular	- Within normal limits.
			Stomach-Nonglandular	- Within normal limits.
			Testis	- Within normal limits.
17922	M	S	MACROSCOPIC:	
			All Tissues	- Within normal limits.
			MICROSCOPIC:	
			Adrenal, cortex	- Vacuolar change, bilateral, trace.
			Adrenal, medulla	- Within normal limits.
			Bone	- Within normal limits.
			Brain	- Within normal limits.
			Epididymis	- Within normal limits.
			Heart	- Lymphocytic infiltration, focal, trace.
			Kidney	- Within normal limits.
			Liver	- Glycogen deposition, increased, generalized, mild.
			Lung	- Within normal limits.
			Prostate	- Within normal limits.

[1]FATE CODES: S=SCHEDULED SACRIFICE E=SACRIFICED IN EXTREMIS D=DIED ON STUDY

GROUP, ANIMAL NUMBER	SEX	FATE[1]	TISSUE:	OBSERVATIONS:
0 mg/kg/day				
17922	M	S	MICROSCOPIC: (CONTINUED)	
			Seminal Vesicle	- Within normal limits.
			Stomach-Glandular	- Within normal limits.
			Stomach-Nonglandular	- Within normal limits.
			Testis	- Within normal limits.
17923	M	S	MACROSCOPIC:	
			Kidney	- Dilatation, bilateral, trace, pelvis.
			MICROSCOPIC:	
			Adrenal, cortex	- Vacuolar change, bilateral, trace.
			Adrenal, medulla	- Within normal limits.
			Bone	- Within normal limits.
			Brain	- Within normal limits.
			Epididymis	- Within normal limits.
			Heart	- Lymphocytic infiltration, focal, trace.
			Kidney	- Hydronephrosis, bilateral, trace.
				- Chronic progressive nephropathy, multifocal, bilateral, trace.
			Liver	- Within normal limits.
			Lung	- Within normal limits.
			Prostate	- Within normal limits.
			Seminal Vesicle	- Within normal limits.
			Stomach-Glandular	- Within normal limits.
			Stomach-Nonglandular	- Within normal limits.
			Testis	- Within normal limits.
17924	M	S	MACROSCOPIC:	
			All Tissues	- Within normal limits.
			MICROSCOPIC:	
			Adrenal, cortex	- Within normal limits.
			Adrenal, medulla	- Within normal limits.
			Bone	- Within normal limits.
			Brain	- Within normal limits.
			Epididymis	- Within normal limits.
			Heart	- Within normal limits.
			Kidney	- Chronic progressive nephropathy, multifocal, bilateral, trace.
			Liver	- Glycogen deposition, increased, generalized, trace.

[1]FATE CODES: S=SCHEDULED SACRIFICE E=SACRIFICED IN EXTREMIS D=DIED ON STUDY

194

INDIVIDUAL ANIMAL DATA RECORD: PATHOLOGY
0 - Termination: Rats

GROUP, ANIMAL NUMBER	SEX	FATE[1]	TISSUE:	OBSERVATIONS:
0 mg/kg/day				
17924	M	S	MICROSCOPIC: (CONTINUED)	
			Lung	- Within normal limits.
			Prostate	- Within normal limits.
			Seminal Vesicle	- Within normal limits.
			Stomach-Glandular	- Within normal limits.
			Stomach-Nonglandular	- Within normal limits.
			Testis	- Within normal limits.
17925	M	S	MACROSCOPIC:	
			All Tissues	- Within normal limits.
			MICROSCOPIC:	
			Adrenal, cortex	- Within normal limits.
			Adrenal, medulla	- Within normal limits.
			Bone	- Within normal limits.
			Brain	- Within normal limits.
			Epididymis	- Within normal limits.
			Heart	- Within normal limits.
			Kidney	- Chronic progressive nephropathy, multifocal, bilateral, mild.
			Liver	- Within normal limits.
			Lung	- Peribronchial lymphoid infiltration, multifocal, mild.
			Prostate	- Within normal limits.
			Seminal Vesicle	- Within normal limits.
			Stomach-Glandular	- Within normal limits.
			Stomach-Nonglandular	- Within normal limits.
			Testis	- Within normal limits.
17926	M	S	MACROSCOPIC:	
			All Tissues	- Within normal limits.
			MICROSCOPIC:	
			Adrenal, cortex	- Within normal limits.
			Adrenal, medulla	- Within normal limits.
			Bone	- Within normal limits.
			Brain	- Within normal limits.
			Epididymis	- Within normal limits.
			Heart	- Within normal limits.
			Kidney	- Chronic progressive nephropathy, multifocal, bilateral, trace.

[1]FATE CODES: S=SCHEDULED SACRIFICE E=SACRIFICED IN EXTREMIS D=DIED ON STUDY

193

GROUP, ANIMAL NUMBER	SEX	FATE[1]	TISSUE:	OBSERVATIONS:
0 mg/kg/day				
17926	M	S	MICROSCOPIC: (CONTINUED)	
			Liver	- Glycogen deposition, increased, multifocal, trace.
			Lung	- Peribronchial lymphoid infiltration, multifocal, mild.
			Prostate	- Within normal limits.
			Seminal Vesicle	- Within normal limits.
			Stomach-Glandular	- Within normal limits.
			Stomach-Nonglandular	- Within normal limits.
			Testis	- Within normal limits.
17927	M	D	MACROSCOPIC:	
			Kidney	- Hydronephrosis, bilateral, mild.
			Prostate	- Firm, moderate.
			Urinary Bladder	- Mucosa, hemorrhagic, focal, moderate; Walls, increased vascularity, moderate; Probable cause of death.
			MICROSCOPIC:	
			Kidney	- Microconcretion, multifocal, bilateral, moderate.
				- Tubular degeneration, multifocal, bilateral, mild.
				- Medial calcification, bilateral, moderate.
			Prostate	- Inflammation, generalized, suppurative, severe.
			Seminal Vesicle	- Inflammation, acute, generalized, severe.
			Urinary Bladder	- Inflammation, ulcerative, generalized, moderate.
17930	M	S	MACROSCOPIC:	
			All tissues	- Within normal limits.
			MICROSCOPIC:	
			Adrenal, cortex	- Within normal limits.
			Adrenal, medulla	- Within normal limits.
			Bone	- Within normal limits.
			Brain	- Within normal limits.
			Epididymis	- Within normal limits.
			Heart	- Within normal limits.
			Kidney	- Within normal limits.
			Liver	- Within normal limits.
			Lung	- Peribronchial lymphoid infiltration, multifocal, trace.
			Prostate	- Within normal limits.
			Seminal Vesicle	- Within normal limits.

[1]FATE CODES: S=SCHEDULED SACRIFICE E=SACRIFICED IN EXTREMIS D=DIED ON STUDY

196

GROUP, ANIMAL NUMBER	SEX	FATE[1]	TISSUE:	OBSERVATIONS:
0 mg/kg/day				
17930	M	S	MICROSCOPIC: (CONTINUED)	
			Stomach-Glandular	- Within normal limits.
			Stomach-Nonglandular	- Within normal limits.
			Testis	- Within normal limits.
17931	M	S	MACROSCOPIC:	
			All Tissues	- Within normal limits.
			MICROSCOPIC:	
			Adrenal, cortex	- Within normal limits.
			Adrenal, medulla	- Within normal limits.
			Bone	- Within normal limits.
			Brain	- Within normal limits.
			Epididymis	- Within normal limits.
			Heart	- Within normal limits.
			Kidney	- Within normal limits.
			Liver	- Glycogen deposition, increased, multifocal, trace.
			Lung	- Peribronchial lymphoid infiltration, multifocal, mild.
				- Interstitial tissue, inflammation, chronic, multifocal, trace.
			Prostate	- Within normal limits.
			Seminal Vesicle	- Within normal limits.
			Stomach-Glandular	- Within normal limits.
			Stomach-Nonglandular	- Within normal limits.
			Testis	- Within normal limits.
17932	F	S	MACROSCOPIC:	
			All Tissues	- Within normal limits.
			MICROSCOPIC:	
			ALL TISSUES	- HISTOPATHOLOGY NOT REQUIRED.

[1]FATE CODES: S=SCHEDULED SACRIFICE F=SACRIFICED IN EXTREMIS D=DIED ON STUDY

197

INDIVIDUAL ANIMAL DATA RECORD: PATHOLOGY
0 - Termination: Rats

GROUP, ANIMAL NUMBER	SEX	FATE[1]	TISSUE:	OBSERVATIONS:
0 mg/kg/day				
17933	F	S	MACROSCOPIC:	
			All Tissues	- Within normal limits.
			MICROSCOPIC:	
			ALL TISSUES	- HISTOPATHOLOGY NOT REQUIRED.
17934	F	D	MACROSCOPIC:	
			Kidney	- Dilated pelvis, mild, left side.
			Liver	- Pale, mild.
			Stomach	- Glandular mucosa, red foci, 1 to 2 mm, scattered, mild.
			Thymus	- Dark red foci, 2 to 3 mm, moderate.
			Cause of death	- Undetermined.
			MICROSCOPIC:	
			Kidney	- Hydronephrosis, bilateral, trace.
				- Chronic progressive nephropathy, multifocal, bilateral, trace.
			Liver	- Within normal limits.
			Stomach-Glandular	- Within normal limits.
			Thymus	- Hemorrhage, multifocal, moderate.
17935	F	S	MACROSCOPIC:	
			All Tissues	- Within normal limits.
			MICROSCOPIC:	
			ALL TISSUES	- HISTOPATHOLOGY NOT REQUIRED.
17936	F	S	MACROSCOPIC:	
			All Tissues	- Within normal limits.
			MICROSCOPIC:	
			ALL TISSUES	- HISTOPATHOLOGY NOT REQUIRED.

[1]FATE CODES: S=SCHEDULED SACRIFICE E=SACRIFICED IN EXTREMIS D=DIED ON STUDY

INDIVIDUAL ANIMAL DATA RECORD: PATHOLOGY
0 - Termination: Rats

GROUP, ANIMAL NUMBER	SEX	FATE[1]	TISSUE:	OBSERVATIONS:
0 mg/kg/day				
17937	F	S	MACROSCOPIC:	
			All Tissues	- Within normal limits.
			MICROSCOPIC:	
			ALL TISSUES	- HISTOPATHOLOGY NOT REQUIRED.
17938	F	S	MACROSCOPIC:	
			All Tissues	- Within normal limits.
			MICROSCOPIC:	
			Adrenal, cortex	- Within normal limits.
			Adrenal, medulla	- Within normal limits.
			Bone	- Within normal limits.
			Brain	- Within normal limits.
			Heart	- Within normal limits.
			Kidney	- Within normal limits.
			Liver	- Within normal limits.
			Lung	- Peribronchial lymphoid infiltration, multifocal, trace.
			Ovary	- Within normal limits.
			Stomach-Glandular	- Within normal limits.
			Stomach-Nonglandular	- Within normal limits.
			Uterus	- Within normal limits.
			Uterus, cervix	- Within normal limits.
17939	F	S	MACROSCOPIC:	
			All Tissues	- Within normal limits.
			MICROSCOPIC:	
			ALL TISSUES	- HISTOPATHOLOGY NOT REQUIRED.

[1]FATE CODES: S=SCHEDULED SACRIFICE E=SACRIFICED IN EXTREMIS D=DIED ON STUDY

INDIVIDUAL ANIMAL DATA RECORD: PATHOLOGY
0 - Termination: Rats

GROUP, ANIMAL NUMBER	SEX	FATE[1]	TISSUE:	OBSERVATIONS:
0 mg/kg/day				
17940	F	D	MACROSCOPIC:	
			All Tissues	- Within normal limits.
			MICROSCOPIC:	
			ALL TISSUES	- HISTOPATHOLOGY NOT REQUIRED.
17941	F	S	MACROSCOPIC:	
			All Tissues	- Within normal limits.
			MICROSCOPIC:	
			Adrenal, cortex	- Within normal limits.
			Adrenal, medulla	- Within normal limits.
			Bone	- Within normal limits.
			Brain	- Within normal limits.
			Heart	- Within normal limits.
			Kidney	- Within normal limits.
			Liver	- Within normal limits.
			Lung	- Interstitial tissue, inflammation, chronic, multifocal, trace.
			Ovary	- Within normal limits.
			Stomach-Glandular	- Within normal limits.
			Stomach-Nonglandular	- Within normal limits.
			Uterus	- Within normal limits.
			Uterus, cervix	- Within normal limits.
17942	F	S	MACROSCOPIC:	
			All Tissues	- Within normal limits.
			MICROSCOPIC:	
			Adrenal, cortex	- Within normal limits.
			Adrenal, medulla	- Within normal limits.
			Bone	- Within normal limits.
			Brain	- Within normal limits.
			Heart	- Within normal limits.
			Kidney	- Within normal limits.
			Liver	- Within normal limits.
			Lung	- Within normal limits.
			Ovary	- Within normal limits.

[1]FATE CODES: S=SCHEDULED SACRIFICE E=SACRIFICED IN EXTREMIS D=DIED ON STUDY

GROUP, ANIMAL NUMBER	SEX	FATE[1]	TISSUE:	OBSERVATIONS:
0 mg/kg/day				
17942	F	S	MICROSCOPIC: (CONTINUED)	
			Stomach-Glandular	- Within normal limits.
			Stomach-Nonglandular	- Within normal limits.
			Uterus	- Within normal limits.
			Uterus, cervix	- Within normal limits.
17943	F	S	MACROSCOPIC:	
			All Tissues	- Within normal limits.
			MICROSCOPIC:	
			ALL TISSUES	- HISTOPATHOLOGY NOT REQUIRED.
17944	F	S	MACROSCOPIC:	
			All Tissues	- Within normal limits.
			MICROSCOPIC:	
			Adrenal, cortex	- Within normal limits.
			Adrenal, medulla	- Within normal limits.
			Bone	- Within normal limits.
			Brain	- Within normal limits.
			Heart	- Within normal limits.
			Kidney	- Within normal limits.
			Liver	- Within normal limits.
			Lung	- Within normal limits.
			Ovary	- Within normal limits.
			Stomach-Glandular	- Within normal limits.
			Stomach-Nonglandular	- Within normal limits.
			Uterus	- Within normal limits.
			Uterus, cervix	- Within normal limits.
17945	F	S	MACROSCOPIC:	
			Lung	- Red foci, 1 to 2 mm, multifocal, mild.
			MICROSCOPIC:	
			ALL TISSUES	- HISTOPATHOLOGY NOT REQUIRED.

[1]FATE CODES: S=SCHEDULED SACRIFICE E=SACRIFICED IN EXTREMIS D=DIED ON STUDY

201

INDIVIDUAL ANIMAL DATA RECORD: PATHOLOGY
0 - Termination: Rats

GROUP, ANIMAL NUMBER	SEX	FATE[1]	TISSUE:	OBSERVATIONS:
0 mg/kg/day				
17946	F	S	MACROSCOPIC:	
			All tissues	- Within normal limits.
			MICROSCOPIC:	
			Adrenal, cortex	- Within normal limits.
			Adrenal, medulla	- Within normal limits.
			Bone	- Within normal limits.
			Brain	- Within normal limits.
			Heart	- Within normal limits.
			Kidney	- pelvis, inflammation, focal, unilateral, mild.
			Liver	- Within normal limits.
			Lung	- Interstitial tissue, inflammation, chronic, multifocal, trace.
			Ovary	- Within normal limits.
			Stomach-Glandular	- Within normal limits.
			Stomach-Nonglandular	- Within normal limits.
			Uterus	- Fibrosis, generalized, bilateral, mild.
				- Pigment, brown, focal, unilateral, trace.
			Uterus, cervix	- Within normal limits.
17947	F	S	MACROSCOPIC:	
			All tissues	- Within normal limits.
			MICROSCOPIC:	
			Adrenal, cortex	- Within normal limits.
			Adrenal, medulla	- Within normal limits.
			Bone	- Within normal limits.
			Brain	- Within normal limits.
			Heart	- Within normal limits.
			Kidney	- Within normal limits.
			Liver	- Within normal limits.
			Lung	- Within normal limits.
			Ovary	- Within normal limits.
			Stomach-Glandular	- Within normal limits.
			Stomach-Nonglandular	- Within normal limits.
			Uterus	- Fibrosis, generalized, bilateral, mild.
			Uterus, cervix	- Within normal limits.

[1]FATE CODES: S=SCHEDULED SACRIFICE E=SACRIFICED IN EXTREMIS D=DIED ON STUDY

GROUP, ANIMAL NUMBER	SEX	FATE[1]	TISSUE:	OBSERVATIONS:
0 mg/kg/day				
17948	F	S	MACROSCOPIC:	
			Kidney	- Pelvic dilatation, moderate, left.
			MICROSCOPIC:	
			ALL TISSUES	- HISTOPATHOLOGY NOT REQUIRED.
17949	F	S	MACROSCOPIC:	
			All Tissues	- Within normal limits.
			MICROSCOPIC:	
			Adrenal, cortex	- Within normal limits.
			Adrenal, medulla	- Within normal limits.
			Bone	- Within normal limits.
			Brain	- Within normal limits.
			Heart	- Within normal limits.
			Kidney	- Within normal limits.
			Liver	- Within normal limits.
			Lung	- Within normal limits.
			Ovary	- Within normal limits.
			Stomach-Glandular	- Within normal limits.
			Stomach-Nonglandular	- Within normal limits.
			Uterus	- Pigment, brown, focal, bilateral, mild.
			Uterus, cervix	- Within normal limits.
17950	F	S	MACROSCOPIC:	
			All Tissues	- Within normal limits.
			MICROSCOPIC:	
			Adrenal, cortex	- Within normal limits.
			Adrenal, medulla	- Within normal limits.
			Bone	- Within normal limits.
			Brain	- Within normal limits.
			Heart	- Within normal limits.
			Kidney	- Within normal limits.
			Liver	- Within normal limits.
			Lung	- Peribronchial lymphoid infiltration, multifocal, mild.
			Ovary	- Within normal limits.

[1]FATE CODES: S=SCHEDULED SACRIFICE E=SACRIFICED IN EXTREMIS D=DIED ON STUDY

GROUP, ANIMAL NUMBER	SEX	FATE[1]	TISSUE:	OBSERVATIONS:
0 mg/kg/day				
17950	F	S	MICROSCOPIC: (CONTINUED)	
			Stomach-Glandular	- Within normal limits.
			Stomach-Nonglandular	- Within normal limits.
			Uterus	- Pigment, brown, focal, bilateral, mild.
			Uterus, cervix	- Within normal limits.
17951	F	S	MACROSCOPIC:	
			All Tissues	- Within normal limits.
			MICROSCOPIC:	
			ALL TISSUES	- HISTOPATHOLOGY NOT REQUIRED.
17952	F	D	MACROSCOPIC:	
			Soft Tissue	- Mediastinum, hemorrhagic, severe.
			Thoracic Cavity	- Hemothorax, severe.
			Trachea	- Rupture, gavage injury, cause of death.
			MICROSCOPIC:	
			Soft Tis., Thorax	- Hemorrhage, generalized, moderate.
			Trachea	- Within normal limits; Rupture (macroscopic observation) not observed in section.
17953	F	S	MACROSCOPIC:	
			All Tissues	- Within normal limits.
			MICROSCOPIC:	
			ALL TISSUES	- HISTOPATHOLOGY NOT REQUIRED.
17954	F	S	MACROSCOPIC:	
			All Tissues	- Within normal limits.
			MICROSCOPIC:	
			ALL TISSUES	- HISTOPATHOLOGY NOT REQUIRED.

[1]FATE CODES: S=SCHEDULED SACRIFICE E=SACRIFICED IN EXTREMIS D=DIED ON STUDY

INDIVIDUAL ANIMAL DATA RECORD: PATHOLOGY
0 - Terminations: Rats

GROUP, ANIMAL NUMBER	SEX	FATE[1]	TISSUE:	OBSERVATIONS:
0 mg/kg/day				
17955	F	D	MACROSCOPIC:	
			Heart	- Hole, 3 mm, near left atria.
			Lung	- Clotted black material, 2.2 x 2.0 x 1.2 cm, near heart.
			Nose	- Red matting around.
			Thoracic Cavity	- Red fluid, 2 to 3 cc.
			Cause of death	- Undetermined.
			MICROSCOPIC:	
			ALL TISSUES	- HISTOPATHOLOGY NOT REQUIRED.
17956	F	S	MACROSCOPIC:	
			All Tissues	- Within normal limits.
			MICROSCOPIC:	
			ALL TISSUES	- HISTOPATHOLOGY NOT REQUIRED.
17957	F	S	MACROSCOPIC:	
			Uterus	- Enlarged, mild.
			MICROSCOPIC:	
			Adrenal, cortex	- Within normal limits.
			Adrenal, medulla	- Within normal limits.
			Bone	- Within normal limits.
			Brain	- Within normal limits.
			Heart	- Within normal limits.
			Kidney	- Within normal limits.
			Liver	- Within normal limits.
			Lung	- Interstitial tissue, inflammation, chronic, multifocal, mild.
			Ovary	- Within normal limits.
			Stomach-Glandular	- Within normal limits.
			Stomach-Nonglandular	- Within normal limits.
			Uterus	- Fibrosis, generalized, bilateral, mild.
			Uterus, cervix	- Within normal limits.

[1]FATE CODES: S=SCHEDULED SACRIFICE F=SACRIFICED IN EXTREMIS D=DIED ON STUDY

INDIVIDUAL ANIMAL DATA RECORD: PATHOLOGY
O - Termination: Rats

GROUP, ANIMAL NUMBER	SEX	FATE[1]	TISSUE:	OBSERVATIONS:
0 mg/kg/day				
17958	F	S	MACROSCOPIC:	
			All Tissues	- Within normal limits.
			MICROSCOPIC:	
			ALL TISSUES	- HISTOPATHOLOGY NOT REQUIRED.
17959	F	S	MACROSCOPIC:	
			All Tissues	- Within normal limits.
			MICROSCOPIC:	
			ALL TISSUES	- HISTOPATHOLOGY NOT REQUIRED.
17960	F	S	MACROSCOPIC:	
			Hindlimb	- Tarsus joint swollen, mild, right.
			MICROSCOPIC:	
			ALL TISSUES	- HISTOPATHOLOGY NOT REQUIRED.
17961	F	S	MACROSCOPIC:	
			All Tissues	- Within normal limits.
			MICROSCOPIC:	
			Adrenal, cortex	- Within normal limits.
			Adrenal, medulla	- Within normal limits.
			Bone	- Within normal limits.
			Brain	- Within normal limits.
			Heart	- Within normal limits.
			Kidney	- Within normal limits.
			Liver	- Within normal limits.
			Lung	- Within normal limits.
			Ovary	- Within normal limits.
			Stomach-Glandular	- Within normal limits.
			Stomach-Nonglandular	- Within normal limits.
			Uterus	- Pigment, brown, multifocal, unilateral, mild.
				- serosa, Thrombosis, mild.
			Uterus, cervix	- Within normal limits.

146

266

401-169FO

[1]FATE CODES: S=SCHEDULED SACRIFICE E=SACRIFICED IN EXTREMIS D=DIED ON STUDY

INDIVIDUAL ANIMAL DATA RECORD: PATHOLOGY
0 - Termination: Rats

GROUP, ANIMAL NUMBER	SEX	FATE[1]	TISSUE:	OBSERVATIONS:
0.005 mg/kg/day				
17963	M	S	MACROSCOPIC:	
			All Tissues	- Within normal limits.
			MICROSCOPIC:	
			ALL TISSUES	- HISTOPATHOLOGY NOT REQUIRED.
17964	M	D	MACROSCOPIC:	
			Esophagus	- Perforation, 1.5 cm, focal, moderate, proximal.
			Stomach	- Glandular mucosa, hemorrhage, focal, mild.
			Thoracic Cavity	- Contained about 5.0 cc of oily serosanguinous fluid, severe.
			Thorax	- Musculature, necrotic, multifocal, moderate, right side.
			Cause of death	- Gavage error.
			MICROSCOPIC:	
			Esophagus	- Inflammation, acute, moderate.
			Soft Tis., Thorax	- Inflammation, generalized, suppurative, severe.
			Stomach-Glandular	- Within normal limits.
17965	M	S	MACROSCOPIC:	
			All Tissues	- Within normal limits.
			MICROSCOPIC:	
			ALL TISSUES	- HISTOPATHOLOGY NOT REQUIRED.
17966	M	S	MACROSCOPIC:	
			All Tissues	- Within normal limits.
			MICROSCOPIC:	
			ALL TISSUES	- HISTOPATHOLOGY NOT REQUIRED.
17968	M	S	MACROSCOPIC:	
			Abdominal Cavity	- Adhesions, multifocal, mild.
			Kidney	- Pelvis, dilatation, unilateral, mild.
			MICROSCOPIC:	
			ALL TISSUES	- HISTOPATHOLOGY NOT REQUIRED.

[1]FATE CODES: S=SCHEDULED SACRIFICE E=SACRIFICED IN EXTREMIS D=DIED ON STUDY

INDIVIDUAL ANIMAL DATA RECORD: PATHOLOGY
0 - Termination: Rats

GROUP, ANIMAL NUMBER	SEX	FATE[1]	TISSUE:	OBSERVATIONS:
0.005 mg/kg/day				
17969	M	S	MACROSCOPIC:	
			All Tissues	- Within normal limits.
			MICROSCOPIC:	
			ALL TISSUES	- HISTOPATHOLOGY NOT REQUIRED.
17971	M	S	MACROSCOPIC:	
			All Tissues	- Within normal limits.
			MICROSCOPIC:	
			ALL TISSUES	- HISTOPATHOLOGY NOT REQUIRED.
17972	M	E	MACROSCOPIC:	
			Kidney	- Yellow to white lesions, pinpoint to 7 mm in diameter, multiple, bilateral, entire surface; Enlarged, slight, left; Contains white fluid, bilateral.
			Mesenteric Fat	- Stained red around kidneys and urinary bladder.
			Nose and Mouth	- Dried red material around.
			Urinary Bladder	- Contains dark red fluid.
			Cause of death	- Undetermined.
			MICROSCOPIC:	
			Kidney	- Abscess, bilateral, severe.
17973	M	S	MACROSCOPIC:	
			All Tissues	- Within normal limits.
			MICROSCOPIC:	
			ALL TISSUES	- HISTOPATHOLOGY NOT REQUIRED.

[1]FATE CODES: S=SCHEDULED SACRIFICE E=SACRIFICED IN EXTREMIS D=DIED ON STUDY

INDIVIDUAL ANIMAL DATA RECORD: PATHOLOGY
0 - Termination: Rats

GROUP, ANIMAL NUMBER	SEX	FATE[1]	TISSUE:	OBSERVATIONS:
0.005 mg/kg/day				
17974	M	S	MACROSCOPIC: ALL TISSUES	- Within normal limits.
			MICROSCOPIC: ALL TISSUES	- HISTOPATHOLOGY NOT REQUIRED.
17975	M	S	MACROSCOPIC: ALL TISSUES	- Within normal limits.
			MICROSCOPIC: ALL TISSUES	- HISTOPATHOLOGY NOT REQUIRED.
17976	M	S	MACROSCOPIC: ALL TISSUES	- Within normal limits.
			MICROSCOPIC: ALL TISSUES	- HISTOPATHOLOGY NOT REQUIRED.
17977	F	S	MACROSCOPIC: ALL TISSUES	- Within normal limits.
			MICROSCOPIC: ALL TISSUES	- HISTOPATHOLOGY NOT REQUIRED.
17978	F	S	MACROSCOPIC: ALL TISSUES	- Within normal limits.
			MICROSCOPIC: ALL TISSUES	- HISTOPATHOLOGY NOT REQUIRED.

[1]FATE CODES: S=SCHEDULED SACRIFICE E=SACRIFICED IN EXTREMIS D=DIED ON STUDY

INDIVIDUAL ANIMAL DATA RECORD: PATHOLOGY
O - Termination: Rats

GROUP, ANIMAL NUMBER	SEX	FATE[1]	TISSUE:	OBSERVATIONS:
0.005 mg/kg/day				
17979	F	S	MACROSCOPIC: All Tissues	- Within normal limits.
			MICROSCOPIC: ALL TISSUES	- HISTOPATHOLOGY NOT REQUIRED.
17980	F	S	MACROSCOPIC: All Tissues	- Within normal limits.
			MICROSCOPIC: ALL TISSUES	- HISTOPATHOLOGY NOT REQUIRED.
17981	F	S	MACROSCOPIC: Uterus	- Enlarged, moderate; Contains yellow fluid, moderate.
			MICROSCOPIC: ALL TISSUES	- HISTOPATHOLOGY NOT REQUIRED.
17982	F	S	MACROSCOPIC: All Tissues	- Within normal limits.
			MICROSCOPIC: ALL TISSUES	- HISTOPATHOLOGY NOT REQUIRED.
17983	F	D	MACROSCOPIC: Lung	- Congested, mild.
			Cause of death	- Undetermined.
			MICROSCOPIC: Lung	- Hemorrhage, multifocal, moderate.

[1]FATE CODES: S=SCHEDULED SACRIFICE E=SACRIFICED IN EXTREMIS D=DIED ON STUDY

INDIVIDUAL ANIMAL DATA RECORD: PATHOLOGY
0 - Termination: Rats

GROUP, ANIMAL NUMBER	SEX	FATE[1]	TISSUE:	OBSERVATIONS:
0.005 mg/kg/day				
17984	F	S	MACROSCOPIC: ALL TISSUES	- Within normal limits.
			MICROSCOPIC: ALL TISSUES	- HISTOPATHOLOGY NOT REQUIRED.
17985	F	S	MACROSCOPIC: ALL TISSUES	- Within normal limits.
			MICROSCOPIC: ALL TISSUES	- HISTOPATHOLOGY NOT REQUIRED.
17986	F	S	MACROSCOPIC: ALL TISSUES	- Within normal limits.
			MICROSCOPIC: ALL TISSUES	- HISTOPATHOLOGY NOT REQUIRED.
17987	F	S	MACROSCOPIC: ALL TISSUES	- Within normal limits.
			MICROSCOPIC: ALL TISSUES	- HISTOPATHOLOGY NOT REQUIRED.
17988	F	S	MACROSCOPIC: ALL TISSUES	- Within normal limits.
			MICROSCOPIC: ALL TISSUES	- HISTOPATHOLOGY NOT REQUIRED.

[1]FATE CODES: S=SCHEDULED SACRIFICE E=SACRIFICED IN EXTREMIS D=DIED ON STUDY

INDIVIDUAL ANIMAL DATA RECORD: PATHOLOGY
0 - Termination: Rats

GROUP, ANIMAL NUMBER	SEX	FATE[1]	TISSUE:	OBSERVATIONS:
0.005 mg/kg/day				
17989	F	S	MACROSCOPIC: ALL TISSUES	- Within normal limits.
			MICROSCOPIC: ALL TISSUES	- HISTOPATHOLOGY NOT REQUIRED.
17990	F	S	MACROSCOPIC: ALL TISSUES	- Within normal limits.
			MICROSCOPIC: ALL TISSUES	- HISTOPATHOLOGY NOT REQUIRED.
17991	F	S	MACROSCOPIC: ALL TISSUES	- Within normal limits.
			MICROSCOPIC: ALL TISSUES	- HISTOPATHOLOGY NOT REQUIRED.
17992	F	S	MACROSCOPIC: ALL TISSUES	- Within normal limits.
			MICROSCOPIC: ALL TISSUES	- HISTOPATHOLOGY NOT REQUIRED.
17993	F	S	MACROSCOPIC: ALL TISSUES	- Within normal limits.
			MICROSCOPIC: ALL TISSUES	- HISTOPATHOLOGY NOT REQUIRED.

212

[1]FATE CODES: S=SCHEDULED SACRIFICE F=SACRIFICED IN EXTREMIS D=DIED ON STUDY

INDIVIDUAL ANIMAL DATA RECORD: PATHOLOGY
0 - Termination: Rats

GROUP, ANIMAL NUMBER	SEX	FATE[1]	TISSUE:	OBSERVATIONS:
0.005 mg/kg/day				
17994	F	S	MACROSCOPIC: All Tissues	- Within normal limits.
			MICROSCOPIC: ALL TISSUES	- HISTOPATHOLOGY NOT REQUIRED.
17995	F	S	MACROSCOPIC: All Tissues	- Within normal limits.
			MICROSCOPIC: ALL TISSUES	- HISTOPATHOLOGY NOT REQUIRED.
17996	F	S	MACROSCOPIC: All Tissues	- Within normal limits.
			MICROSCOPIC: ALL TISSUES	- HISTOPATHOLOGY NOT REQUIRED.
17997	F	S	MACROSCOPIC: All Tissues	- Within normal limits.
			MICROSCOPIC: ALL TISSUES	- HISTOPATHOLOGY NOT REQUIRED.
17998	F	S	MACROSCOPIC: All Tissues	- Within normal limits.
			MICROSCOPIC: ALL TISSUES	- HISTOPATHOLOGY NOT REQUIRED.

[1]FATE CODES: S=SCHEDULED SACRIFICE E=SACRIFICED IN EXTREMIS D=DIED ON STUDY

INDIVIDUAL ANIMAL DATA RECORD: PATHOLOGY
O - Termination: Rate

GROUP, ANIMAL NUMBER	SEX	FATE[1]	TISSUE:	OBSERVATIONS:
0.005 mg/kg/day				
17999	F	S	MACROSCOPIC: ALL TISSUES	- Within normal limits.
			MICROSCOPIC: ALL TISSUES	- HISTOPATHOLOGY NOT REQUIRED.
18000	F	S	MACROSCOPIC: ALL TISSUES	- Within normal limits.
			MICROSCOPIC: ALL TISSUES	- HISTOPATHOLOGY NOT REQUIRED.
18001	F	S	MACROSCOPIC: ALL TISSUES	- Within normal limits.
			MICROSCOPIC: ALL TISSUES	- HISTOPATHOLOGY NOT REQUIRED.
18002	F	S	MACROSCOPIC: ALL TISSUES	- Within normal limits.
			MICROSCOPIC: ALL TISSUES	- HISTOPATHOLOGY NOT REQUIRED.
18003	F	S	MACROSCOPIC: ALL TISSUES	- Within normal limits.
			MICROSCOPIC: ALL TISSUES	- HISTOPATHOLOGY NOT REQUIRED.

[1]FATE CODES: S=SCHEDULED SACRIFICE E=SACRIFICED IN EXTREMIS D=DIED ON STUDY

INDIVIDUAL ANIMAL DATA RECORD: PATHOLOGY
0 - Termination: Rats

GROUP, ANIMAL NUMBER	SEX	FATE[1]	TISSUE:	OBSERVATIONS:
0.005 mg/kg/day				
18004	F	S	MACROSCOPIC: Ear	- Swollen, bilateral, trace.
			MICROSCOPIC: ALL TISSUES	- HISTOPATHOLOGY NOT REQUIRED.
18005	F	S	MACROSCOPIC: All Tissues	- Within normal limits.
			MICROSCOPIC: ALL TISSUES	- HISTOPATHOLOGY NOT REQUIRED.
18006	F	S	MACROSCOPIC: Kidney	- Pelvis, dilated, unilateral, moderate, left.
			MICROSCOPIC: ALL TISSUES	- HISTOPATHOLOGY NOT REQUIRED.

[1]FATE CODES: S=SCHEDULED SACRIFICE E=SACRIFICED IN EXTREMIS D=DIED ON STUDY

INDIVIDUAL ANIMAL DATA RECORD: PATHOLOGY
0 - Termination: Rats

GROUP, ANIMAL NUMBER	SEX	FATE[1]	TISSUE:	OBSERVATIONS:
0.015 mg/kg/day				
18008	M	S	MACROSCOPIC: Heart	- White foci, 0.2 x 0.2 cm, multifocal, mild.
			MICROSCOPIC: ALL TISSUES	- HISTOPATHOLOGY NOT REQUIRED.
18009	M	S	MACROSCOPIC: All Tissues	- Within normal limits.
			MICROSCOPIC: ALL TISSUES	- HISTOPATHOLOGY NOT REQUIRED.
18010	M	S	MACROSCOPIC: All Tissues	- Within normal limits.
			MICROSCOPIC: ALL TISSUES	- HISTOPATHOLOGY NOT REQUIRED.
18012	M	S	MACROSCOPIC: All Tissues	- Within normal limits.
			MICROSCOPIC: ALL TISSUES	- HISTOPATHOLOGY NOT REQUIRED.
18015	M	S	MACROSCOPIC: All Tissues	- Within normal limits.
			MICROSCOPIC: ALL TISSUES	- HISTOPATHOLOGY NOT REQUIRED.

[1]FATE CODES: S=SCHEDULED SACRIFICE E=SACRIFICED IN EXTREMIS D=DIED ON STUDY

INDIVIDUAL ANIMAL DATA RECORD: PATHOLOGY
0 - Termination: Rats

GROUP, ANIMAL NUMBER	SEX	FATE[1]	TISSUE:	OBSERVATIONS:
0.015 mg/kg/day				
18016	M	S	MACROSCOPIC: All Tissues	- Within normal limits.
			MICROSCOPIC: ALL TISSUES	- HISTOPATHOLOGY NOT REQUIRED.
18017	M	S	MACROSCOPIC: Liver	- Tan foci, 0.2 cm diameter, multifocal, trace.
			MICROSCOPIC: ALL TISSUES	- HISTOPATHOLOGY NOT REQUIRED.
18018	M	S	MACROSCOPIC: Spleen	- Clear cysts, multifocal, trace.
			MICROSCOPIC: ALL TISSUES	- HISTOPATHOLOGY NOT REQUIRED.
18020	M	S	MACROSCOPIC: All Tissues	- Within normal limits.
			MICROSCOPIC: ALL TISSUES	- HISTOPATHOLOGY NOT REQUIRED.
18021	M	S	MACROSCOPIC: All Tissues	- Within normal limits.
			MICROSCOPIC: ALL TISSUES	- HISTOPATHOLOGY NOT REQUIRED.

[1]FATE CODES: S=SCHEDULED SACRIFICE E=SACRIFICED IN EXTREMIS D=DIED ON STUDY

INDIVIDUAL ANIMAL DATA RECORD: PATHOLOGY
0 - Termination: Rats

GROUP, ANIMAL NUMBER	SEX	FATE[1]	TISSUE:	OBSERVATIONS:
0.015 mg/kg/day				
18022	F	S	MACROSCOPIC: ALL TISSUES	- Within normal limits.
			MICROSCOPIC: ALL TISSUES	- HISTOPATHOLOGY NOT REQUIRED.
18023	F	S	MACROSCOPIC: ALL TISSUES	- Within normal limits.
			MICROSCOPIC: ALL TISSUES	- HISTOPATHOLOGY NOT REQUIRED.
18024	F	S	MACROSCOPIC: ALL TISSUES	- Within normal limits.
			MICROSCOPIC: ALL TISSUES	- HISTOPATHOLOGY NOT REQUIRED.
18025	F	S	MACROSCOPIC: ALL TISSUES	- Within normal limits.
			MICROSCOPIC: ALL TISSUES	- HISTOPATHOLOGY NOT REQUIRED.
18026	F	S	MACROSCOPIC: ALL TISSUES	- Within normal limits.
			MICROSCOPIC: ALL TISSUES	- HISTOPATHOLOGY NOT REQUIRED.

[1]FATE CODES: S=SCHEDULED SACRIFICE E=SACRIFICED IN EXTREMIS D=DIED ON STUDY

INDIVIDUAL ANIMAL DATA RECORD: PATHOLOGY
0 - Termination: Rats

GROUP, ANIMAL NUMBER	SEX	FATE[1]	TISSUE:	OBSERVATIONS:
0.015 mg/kg/day				
18027	F	S	MACROSCOPIC: ALL TISSUES	- Within normal limits.
			MICROSCOPIC: ALL TISSUES	- HISTOPATHOLOGY NOT REQUIRED.
18028	F	S	MACROSCOPIC: ALL TISSUES	- Within normal limits.
			MICROSCOPIC: ALL TISSUES	- HISTOPATHOLOGY NOT REQUIRED.
18029	F	S	MACROSCOPIC: ALL TISSUES	- Within normal limits.
			MICROSCOPIC: ALL TISSUES	- HISTOPATHOLOGY NOT REQUIRED.
18030	F	S	MACROSCOPIC: ALL TISSUES	- Within normal limits.
			MICROSCOPIC: ALL TISSUES	- HISTOPATHOLOGY NOT REQUIRED.
18031	F	S	MACROSCOPIC: ALL TISSUES	- Within normal limits.
			MICROSCOPIC: ALL TISSUES	- HISTOPATHOLOGY NOT REQUIRED.

[1]FATE CODES: S=SCHEDULED SACRIFICE E=SACRIFICED IN EXTREMIS D=DIED ON STUDY

INDIVIDUAL ANIMAL DATA RECORD: PATHOLOGY
0 - Termination: Rats

GROUP, ANIMAL NUMBER	SEX	FATE[1]	TISSUE:	OBSERVATIONS:
0.015 mg/kg/day				
18032	F	S	MACROSCOPIC: All Tissues	- Within normal limits.
			MICROSCOPIC: ALL TISSUES	- HISTOPATHOLOGY NOT REQUIRED.
18033	F	S	MACROSCOPIC: All Tissues	- Within normal limits.
			MICROSCOPIC: ALL TISSUES	- HISTOPATHOLOGY NOT REQUIRED.
18034	F	S	MACROSCOPIC: All Tissues	- Within normal limits.
			MICROSCOPIC: ALL TISSUES	- HISTOPATHOLOGY NOT REQUIRED.
18035	F	S	MACROSCOPIC: All Tissues	- Within normal limits.
			MICROSCOPIC: ALL TISSUES	- HISTOPATHOLOGY NOT REQUIRED.
18036	F	S	MACROSCOPIC: All Tissues	- Within normal limits.
			MICROSCOPIC: ALL TISSUES	- HISTOPATHOLOGY NOT REQUIRED.

[1]FATE CODES: S=SCHEDULED SACRIFICE E=SACRIFICED IN EXTREMIS D=DIED ON STUDY

INDIVIDUAL ANIMAL DATA RECORD: PATHOLOGY
0 - Termination: Rats

GROUP, ANIMAL NUMBER	SEX	FATE[1]	TISSUE:	OBSERVATIONS:
0.015 mg/kg/day				
18037	F	S	MACROSCOPIC: ALL TISSUES	- Within normal limits.
			MICROSCOPIC: ALL TISSUES	- HISTOPATHOLOGY NOT REQUIRED.
18038	F	S	MACROSCOPIC: ALL TISSUES	- Within normal limits.
			MICROSCOPIC: ALL TISSUES	- HISTOPATHOLOGY NOT REQUIRED.
18039	F	S	MACROSCOPIC: ALL TISSUES	- Within normal limits.
			MICROSCOPIC: ALL TISSUES	- HISTOPATHOLOGY NOT REQUIRED.
18040	F	S	MACROSCOPIC: ALL TISSUES	- Within normal limits.
			MICROSCOPIC: ALL TISSUES	- HISTOPATHOLOGY NOT REQUIRED.
18041	F	S	MACROSCOPIC: ALL TISSUES	- Within normal limits.
			MICROSCOPIC: ALL TISSUES	- HISTOPATHOLOGY NOT REQUIRED.

[1]FATE CODES: S=SCHEDULED SACRIFICE E=SACRIFICED IN EXTREMIS D=DIED ON STUDY

INDIVIDUAL ANIMAL DATA RECORD: PATHOLOGY
0 - Termination: Rats

GROUP, ANIMAL NUMBER	SEX	FATE[1]	TISSUE:	OBSERVATIONS:
0.015 mg/kg/day				
18042	F	S	MACROSCOPIC: All Tissues	- Within normal limits.
			MICROSCOPIC: ALL TISSUES	- HISTOPATHOLOGY NOT REQUIRED.
18043	F	S	MACROSCOPIC: Ovary	- Clear cyst, 0.5 x 0.5 x 0.5 cm, unilateral, mild.
			MICROSCOPIC: ALL TISSUES	- HISTOPATHOLOGY NOT REQUIRED.
18044	F	S	MACROSCOPIC: All Tissues	- Within normal limits.
			MICROSCOPIC: ALL TISSUES	- HISTOPATHOLOGY NOT REQUIRED.
18045	F	S	MACROSCOPIC: All Tissues	- Within normal limits.
			MICROSCOPIC: ALL TISSUES	- HISTOPATHOLOGY NOT REQUIRED.
18046	F	S	MACROSCOPIC: All Tissues	- Within normal limits.
			MICROSCOPIC: ALL TISSUES	- HISTOPATHOLOGY NOT REQUIRED.

[1]FATE CODES: S=SCHEDULED SACRIFICE E=SACRIFICED IN EXTREMIS D=DIED ON STUDY

222

INDIVIDUAL ANIMAL DATA RECORD: PATHOLOGY
0 - Termination: Rats

GROUP, ANIMAL NUMBER	SEX	FATE[1]	TISSUE:	OBSERVATIONS:
0.015 mg/kg/day				
18047	F	S	MACROSCOPIC:	
			All Tissues	- Within normal limits.
			MICROSCOPIC:	
			ALL TISSUES	- HISTOPATHOLOGY NOT REQUIRED.
18048	F	S	MACROSCOPIC:	
			All Tissues	- Within normal limits.
			MICROSCOPIC:	
			ALL TISSUES	- HISTOPATHOLOGY NOT REQUIRED.
18049	F	D	MACROSCOPIC:	
			Duodenum	- Mucosa, congestion, 1 cm length, mild, anterior part.
			Stomach	- Mucosa, dark red foci, pinpoint, trace, pyloric portion.
			MICROSCOPIC:	
			Duodenum	- Congestion, trace.
				- submucosa, Thrombosis, multifocal, mild.
			Stomach-Nonglandular	- Ulcer, multifocal, mild.
			Cause of death	- Undetermined.
18050	F	S	MACROSCOPIC:	
			Kidney	- Hydronephrosis, bilateral, moderate.
			MICROSCOPIC:	
			ALL TISSUES	- HISTOPATHOLOGY NOT REQUIRED.
18051	F	S	MACROSCOPIC:	
			All Tissues	- Within normal limits.
			MICROSCOPIC:	
			ALL TISSUES	- HISTOPATHOLOGY NOT REQUIRED.

[1]FATE CODES: S=SCHEDULED SACRIFICE E=SACRIFICED IN EXTREMIS D=DIED ON STUDY

2267

GROUP, ANIMAL NUMBER	SEX	FATE[1]	TISSUE:	OBSERVATIONS:
0.075 mg/kg/day				
18052	M	S	MACROSCOPIC:	
			All Tissues	- Within normal limits.
			MICROSCOPIC:	
			Adrenal, cortex	- Not in plane of section.
			Adrenal, medulla	- Not in plane of section.
			Bone	- Within normal limits.
			Brain	- Within normal limits.
			Epididymis	- Within normal limits.
			Heart	- Inflammation, chronic, focal, mild.
			Kidney	- Within normal limits.
			Liver	- Glycogen deposition, increased, generalized, trace.
			Lung	- Within normal limits.
			Prostate	- Within normal limits.
			Seminal Vesicle	- Within normal limits.
			Stomach-Glandular	- Within normal limits.
			Stomach-Nonglandular	- Within normal limits.
			Testis	- Within normal limits.
18053	M	S	MACROSCOPIC:	
			All Tissues	- Within normal limits.
			MICROSCOPIC:	
			Adrenal, cortex	- Within normal limits.
			Adrenal, medulla	- Within normal limits.
			Bone	- Within normal limits.
			Brain	- Within normal limits.
			Epididymis	- Within normal limits.
			Heart	- Inflammation, chronic, multifocal, mild.
			Kidney	- Within normal limits.
			Liver	- Glycogen deposition, increased, generalized, mild.
				- Hematopoiesis, extramedullary, focal, trace.
			Lung	- Medial calcification, focal, trace.
			Prostate	- Within normal limits.
			Seminal Vesicle	- Within normal limits.
			Stomach-Glandular	- Within normal limits.
			Stomach-Nonglandular	- Within normal limits.

[1]FATE CODES: S=SCHEDULED SACRIFICE E=SACRIFICED IN EXTREMIS D=DIED ON STUDY

INDIVIDUAL ANIMAL DATA RECORD: PATHOLOGY
0 - Termination: Rats

GROUP, ANIMAL NUMBER	SEX	FATE[1]	TISSUE:	OBSERVATIONS:
0.075 mg/kg/day				
18053	M	S	MICROSCOPIC: (CONTINUED)	
			Testis	- Within normal limits.
18056	M	S	MACROSCOPIC:	
			All tissues	- Within normal limits.
			MICROSCOPIC:	
			Adrenal, cortex	- Within normal limits.
			Adrenal, medulla	- Within normal limits.
			Bone	- Within normal limits.
			Brain	- Within normal limits.
			Epididymis	- Within normal limits.
			Heart	- Inflammation, chronic, multifocal, mild.
			Kidney	- Within normal limits.
			Liver	- Glycogen deposition, increased, generalized, mild.
			Lung	- Within normal limits.
			Prostate	- Within normal limits.
			Seminal Vesicle	- Within normal limits.
			Stomach-Glandular	- Within normal limits.
			Stomach-Nonglandular	- Within normal limits.
			Testis	- Within normal limits.
18057	M	S	MACROSCOPIC:	
			All tissues	- Within normal limits.
			MICROSCOPIC:	
			Adrenal, cortex	- Within normal limits.
			Adrenal, medulla	- Within normal limits.
			Bone	- Within normal limits.
			Brain	- Within normal limits.
			Epididymis	- Within normal limits.
			Heart	- Within normal limits.
			Kidney	- Within normal limits.
			Liver	- Within normal limits.
			Lung	- Perivascular lymphoid infiltration, multifocal, mild.
			Prostate	- Within normal limits.
			Seminal Vesicle	- Within normal limits.
			Stomach-Glandular	- Within normal limits.

[1]FATE CODES: S=SCHEDULED SACRIFICE E=SACRIFICED IN EXTREMIS D=DIED ON STUDY

INDIVIDUAL ANIMAL DATA RECORD: PATHOLOGY
0 - Termination: Rats

GROUP, ANIMAL NUMBER	SEX	FATE[1]	TISSUE:	OBSERVATIONS:
0.075 mg/kg/day				
18057	M	S	MICROSCOPIC: (CONTINUED)	
			Stomach-Nonglandular	- Within normal limits.
			Testis	- Within normal limits.
18060	M	S	MACROSCOPIC:	
			All Tissues	- Within normal limits.
			MICROSCOPIC:	
			Adrenal, cortex	- Within normal limits.
			Adrenal, medulla	- Within normal limits.
			Bone	- Within normal limits.
			Brain	- Within normal limits.
			Epididymis	- Within normal limits.
			Heart	- Within normal limits.
			Kidney	- Within normal limits.
			Liver	- Glycogen deposition, increased, generalized, mild.
			Lung	- Within normal limits.
			Prostate	- Within normal limits.
			Seminal Vesicle	- Within normal limits.
			Stomach-Glandular	- Within normal limits.
			Stomach-Nonglandular	- Within normal limits.
			Testis	- Within normal limits.
18061	M	S	MACROSCOPIC:	
			All Tissues	- Within normal limits.
			MICROSCOPIC:	
			Adrenal, cortex	- Within normal limits.
			Adrenal, medulla	- Within normal limits.
			Bone	- Within normal limits.
			Brain	- Within normal limits.
			Epididymis	- Within normal limits.
			Heart	- Within normal limits.
			Kidney	- Within normal limits.
			Liver	- Glycogen deposition, increased, generalized, mild.
			Lung	- Within normal limits.
			Prostate	- Within normal limits.
			Seminal Vesicle	- Within normal limits.

[1]FATE CODES: S=SCHEDULED SACRIFICE E=SACRIFICED IN EXTREMIS D=DIED ON STUDY

INDIVIDUAL ANIMAL DATA RECORD: PATHOLOGY
0 - Termination: Rats

GROUP, ANIMAL NUMBER	SEX	FATE[1]	TISSUE:	OBSERVATIONS:
0.075 mg/kg/day				
18061	M	S	MICROSCOPIC: (CONTINUED)	
			Stomach-Glandular	- Within normal limits.
			Stomach-Nonglandular	- Within normal limits.
			Testis	- Within normal limits.
18062	M	S	MACROSCOPIC:	
			All Tissues	- Within normal limits.
			MICROSCOPIC:	
			Adrenal, cortex	- Within normal limits.
			Adrenal, medulla	- Within normal limits.
			Bone	- Increased osteoclastic activity, focal, mild.
			Brain	- Within normal limits.
			Epididymis	- Within normal limits.
			Heart	- Within normal limits.
			Kidney	- pelvis, inflammation, chronic, unilateral, mild.
			Liver	- Within normal limits.
			Lung	- Interstitial tissue, inflammation, chronic, multifocal, moderate.
			Prostate	- Within normal limits.
			Seminal Vesicle	- Within normal limits.
			Stomach-Glandular	- Within normal limits.
			Stomach-Nonglandular	- Within normal limits.
			Testis	- Within normal limits.
18063	M	S	MACROSCOPIC:	
			All Tissues	- Within normal limits.
			MICROSCOPIC:	
			Adrenal, cortex	- Within normal limits.
			Adrenal, medulla	- Within normal limits.
			Bone	- Within normal limits.
			Brain	- Within normal limits.
			Epididymis	- Within normal limits.
			Heart	- Inflammation, chronic, multifocal, mild.
			Kidney	- Within normal limits.
			Liver	- Glycogen deposition, increased, generalized, moderate.
			Lung	- Peribronchial lymphoid infiltration, multifocal, mild.
			Prostate	- Within normal limits.

[1]FATE CODES: S=SCHEDULED SACRIFICE E=SACRIFICED IN EXTREMIS D=DIED ON STUDY

GROUP, ANIMAL NUMBER	SEX	FATE[1]	TISSUE:	OBSERVATIONS:
0.075 mg/kg/day				
18063	M	S	MICROSCOPIC: (CONTINUED)	
			Seminal Vesicle	- Within normal limits.
			Stomach-Glandular	- Within normal limits.
			Stomach-Nonglandular	- Within normal limits.
			Testis	- Within normal limits.
18064	M	S	MACROSCOPIC:	
			Liver	- Reticulated, moderate.
			MICROSCOPIC:	
			Adrenal, cortex	- Within normal limits.
			Adrenal, medulla	- Within normal limits.
			Bone	- Within normal limits.
			Brain	- Within normal limits.
			Epididymis	- Within normal limits.
			Heart	- Within normal limits.
			Kidney	- Chronic progressive nephropathy, multifocal, bilateral, mild.
			Liver	- Glycogen deposition, increased, generalized, moderate.
			Lung	- Within normal limits.
			Prostate	- Within normal limits.
			Seminal Vesicle	- Within normal limits.
			Stomach-Glandular	- Within normal limits.
			Stomach-Nonglandular	- Within normal limits.
			Testis	- Within normal limits.
18065	M	S	MACROSCOPIC:	
			All Tissues	- Within normal limits.
			MICROSCOPIC:	
			Adrenal, cortex	- Within normal limits.
			Adrenal, medulla	- Within normal limits.
			Bone	- Within normal limits.
			Brain	- Within normal limits.
			Epididymis	- Within normal limits.
			Heart	- Within normal limits.
			Kidney	- Within normal limits.
			Liver	- Within normal limits.
			Lung	- Within normal limits.

[1]FATE CODES: S=SCHEDULED SACRIFICE E=SACRIFICED IN EXTREMIS D=DIED ON STUDY

INDIVIDUAL ANIMAL DATA RECORD: PATHOLOGY
0 - Termination: Rats

GROUP, ANIMAL NUMBER	SEX	FATE[1]	TISSUE:	OBSERVATIONS:
0.075 mg/kg/day				
18065	M	S	MICROSCOPIC: (CONTINUED)	
			Prostate	- Within normal limits.
			Seminal Vesicle	- Within normal limits.
			Stomach-Glandular	- Within normal limits.
			Stomach-Nonglandular	- Within normal limits.
			Testis	- Within normal limits.
18067	F	D	MACROSCOPIC:	
			Lung	- Congestion, 3 to 6 mm, scattered, moderate.
			Cause of death	- Undetermined.
			MICROSCOPIC:	
			Lung	- Congestion, generalized, mild.
				- Peribronchial lymphoid infiltration, multifocal, mild.
18068	F	S	MACROSCOPIC:	
			All tissues	- Within normal limits.
			MICROSCOPIC:	
			ALL TISSUES	- HISTOPATHOLOGY NOT REQUIRED.
18069	F	S	MACROSCOPIC:	
			All tissues	- Within normal limits.
			MICROSCOPIC:	
			ALL TISSUES	- HISTOPATHOLOGY NOT REQUIRED.
18070	F	S	MACROSCOPIC:	
			All tissues	- Within normal limits.
			MICROSCOPIC:	
			Adrenal, cortex	- Within normal limits.
			Adrenal, medulla	- Within normal limits.
			Bone	- Within normal limits.
			Brain	- Within normal limits.
			Heart	- Within normal limits.
			Kidney	- Within normal limits.
			Liver	- Lymphocytic infiltration, focal, trace.
			Lung	- Peribronchial lymphoid infiltration, multifocal, mild.
			Ovary	- Within normal limits.

[1]FATE CODES: S=SCHEDULED SACRIFICE E=SACRIFICED IN EXTREMIS D=DIED ON STUDY

INDIVIDUAL ANIMAL DATA RECORD: PATHOLOGY
0 - Termination: Rats

GROUP, ANIMAL NUMBER	SEX	FATE[1]	TISSUE:	OBSERVATIONS:
0.075 mg/kg/day				
18070	F	S	MICROSCOPIC: (CONTINUED)	
			Stomach-Glandular	- Within normal limits. /
			Stomach-Nonglandular	- Within normal limits.
			Uterus	- Fibrosis, generalized, bilateral, mild.
			Uterus, cervix	- Within normal limits.
18071	F	D	MACROSCOPIC:	
			All Tissues	- Within normal limits.
			MICROSCOPIC:	
			ALL TISSUES	- HISTOPATHOLOGY NOT REQUIRED.
18072	F	S	MACROSCOPIC:	
			All Tissues	- Within normal limits.
			MICROSCOPIC:	
			Adrenal, cortex	- Within normal limits.
			Adrenal, medulla	- Within normal limits.
			Bone	- Within normal limits.
			Brain	- Within normal limits.
			Heart	- Within normal limits.
			Kidney	- Chronic progressive nephropathy, multifocal, unilateral, trace.
			Liver	- Within normal limits.
			Lung	- Interstitial tissue, inflammation, chronic, multifocal, trace.
			Ovary	- Within normal limits.
			Stomach-Glandular	- Within normal limits.
			Stomach-Nonglandular	- Within normal limits.
			Uterus	- Pigment, brown, focal, bilateral, mild.
			Uterus, cervix	- Within normal limits.
18073	F	D	MACROSCOPIC:	
			All Tissues	- Within normal limits.
			MICROSCOPIC:	
			ALL TISSUES	- HISTOPATHOLOGY NOT REQUIRED.

[1]FATE CODES: S=SCHEDULED SACRIFICE E=SACRIFICED IN EXTREMIS D=DIED ON STUDY

INDIVIDUAL ANIMAL DATA RECORD: PATHOLOGY
O - Termination: Rate

GROUP, ANIMAL NUMBER	SEX	FATE[1]	TISSUE:	OBSERVATIONS:
0.075 mg/kg/day				
18074	F	D	MACROSCOPIC:	
			Lung	- Congestion, diffuse, moderate.
			Cause of death	- Undetermined.
			MICROSCOPIC:	
			Lung	- Within normal limits.
18075	F	S	MACROSCOPIC:	
			All tissues	- Within normal limits.
			MICROSCOPIC:	
			Adrenal, cortex	- Within normal limits.
			Adrenal, medulla	- Within normal limits.
			Bone	- Within normal limits.
			Brain	- Within normal limits.
			Heart	- Within normal limits.
			Kidney	- Within normal limits.
			Liver	- Within normal limits.
			Lung	- Within normal limits.
			Ovary	- Within normal limits.
			Stomach-Glandular	- Within normal limits.
			Stomach-Nonglandular	- Within normal limits.
			Uterus	- Pigment, brown, focal, bilateral, trace.
			Uterus, cervix	- Within normal limits.
18076	F	D	MACROSCOPIC:	
			All tissues	- Within normal limits.
			MICROSCOPIC:	
			ALL TISSUES	- HISTOPATHOLOGY NOT REQUIRED.

[1]FATE CODES: S=SCHEDULED SACRIFICE E=SACRIFICED IN EXTREMIS D=DIED ON STUDY

INDIVIDUAL ANIMAL DATA RECORD: PATHOLOGY
0 - Termination: Rats

GROUP, ANIMAL NUMBER	SEX	FATE[1]	TISSUE:	OBSERVATIONS:
0.075 mg/kg/day				
18077	F	D	MACROSCOPIC:	
			All tissues	- Within normal limits.
			MICROSCOPIC:	
			ALL TISSUES	- HISTOPATHOLOGY NOT REQUIRED.
18078	F	S	MACROSCOPIC:	
			Skin	- Hair loss, mild, forelimbs, hindlimbs, ventral thorax, abdomen, base of tail.
			MICROSCOPIC:	
			Adrenal, cortex	- Within normal limits.
			Adrenal, medulla	- Within normal limits.
			Bone	- Within normal limits.
			Brain	- Within normal limits.
			Heart	- Within normal limits.
			Kidney	- Chronic progressive nephropathy, multifocal, bilateral, trace.
			Liver	- Within normal limits.
			Lung	- Interstitial tissue, inflammation, chronic, multifocal, mild.
			Ovary	- Within normal limits.
			Skin	- Within normal limits.
			Stomach-Glandular	- Within normal limits.
			Stomach-Nonglandular	- Within normal limits.
			Uterus	- Pigment, brown, focal, unilateral, mild.
			Uterus, cervix	- Within normal limits.
18079	F	D	MACROSCOPIC:	
			Heart	- Pale, mild.
			Kidney	- Congestion, bilateral, moderate, corticomedullary junction.
			Lung	- Congestion, diffuse, mild.
			Stomach	- Glandular mucosa, red focus, 2 mm, mild.
			Cause of death	- Undetermined.
			MICROSCOPIC:	
			Heart	- Inflammation, acute, generalized, moderate. - Necrosis, multifocal, mild. - Thrombosis, atrial, mild.
			Kidney	- Within normal limits.

[1]FATE CODES: S=SCHEDULED SACRIFICE E=SACRIFICED IN EXTREMIS D=DIED ON STUDY

INDIVIDUAL ANIMAL DATA RECORD: PATHOLOGY
0 - Termination: Rats

GROUP, ANIMAL NUMBER	SEX	FATE[1]	TISSUE:	OBSERVATIONS:
0.075 mg/kg/day				
18079	F	D	MICROSCOPIC: (CONTINUED)	
			Lung	- Congestion, generalized, trace.
				- Peribronchial lymphoid infiltration, multifocal, mild.
			Stomach-Glandular	- Ulcer, focal, trace.
18080	F	D	MACROSCOPIC:	
			All Tissues	- Within normal limits.
			MICROSCOPIC:	
			ALL TISSUES	- HISTOPATHOLOGY NOT REQUIRED.
18081	F	D	MACROSCOPIC:	
			Lung	- Congestion, diffuse, moderate.
			Cause of death	- Undetermined.
			MICROSCOPIC:	
			Lung	- Congestion, generalized, mild.
18082	F	D	MACROSCOPIC:	
			All Tissues	- Within normal limits.
			MICROSCOPIC:	
			ALL TISSUES	- HISTOPATHOLOGY NOT REQUIRED.
18083	F	S	MACROSCOPIC:	
			All Tissues	- Within normal limits.
			MICROSCOPIC:	
			Adrenal, cortex	- Within normal limits.
			Adrenal, medulla	- Within normal limits.
			Bone	- Within normal limits.
			Brain	- Within normal limits.
			Heart	- Within normal limits.
			Kidney	- Chronic progressive nephropathy, multifocal, bilateral, trace.
			Liver	- Within normal limits.
			Lung	- Within normal limits.
			Ovary	- Within normal limits.
			Stomach-Glandular	- Within normal limits.
			Stomach-Nonglandular	- Within normal limits.

[1]FATE CODES: S=SCHEDULED SACRIFICE E=SACRIFICED IN EXTREMIS D=DIED ON STUDY

GROUP, ANIMAL NUMBER	SEX	FATE[1]	TISSUE:	OBSERVATIONS:
0.075 mg/kg/day				
18083	F	S	MICROSCOPIC: (CONTINUED)	
			Uterus	- Pigment, brown, focal, unilateral, trace.
			Uterus, cervix	- Within normal limits.
18084	F	D	MACROSCOPIC:	
			All Tissues	- Within normal limits.
			MICROSCOPIC:	
			ALL TISSUES	- HISTOPATHOLOGY NOT REQUIRED.
18085	F	S	MACROSCOPIC:	
			All Tissues	- Within normal limits.
			MICROSCOPIC:	
			ALL TISSUES	- HISTOPATHOLOGY NOT REQUIRED.
18086	F	S	MACROSCOPIC:	
			All Tissues	- Within normal limits.
			MICROSCOPIC:	
			Adrenal, cortex	- Within normal limits.
			Adrenal, medulla	- Within normal limits.
			Bone	- Within normal limits.
			Brain	- Within normal limits.
			Heart	- Within normal limits.
			Kidney	- Within normal limits.
			Liver	- Within normal limits.
			Lung	- Within normal limits.
			Ovary	- Within normal limits.
			Stomach-Glandular	- Within normal limits.
			Stomach-Nonglandular	- Within normal limits.
			Uterus	- Fibrosis, generalized, bilateral, mild.
			Uterus, cervix	- Fibrosis, generalized, trace.

[1]FATE CODES: S=SCHEDULED SACRIFICE E=SACRIFICED IN EXTREMIS D=DIED ON STUDY

INDIVIDUAL ANIMAL DATA RECORD: PATHOLOGY
0 - Termination: Rats

GROUP, ANIMAL NUMBER	SEX	FATE[1]	TISSUE:	OBSERVATIONS:
0.075 mg/kg/day				
18087	F	D	MACROSCOPIC:	
			All Tissues	- Within normal limits.
			MICROSCOPIC:	
			ALL TISSUES	- HISTOPATHOLOGY NOT REQUIRED.
18088	F	S	MACROSCOPIC:	
			Kidney	- Pelvis dilated, unilateral, mild.
			MICROSCOPIC:	
			Adrenal, cortex	- Within normal limits.
			Adrenal, medulla	- Within normal limits.
			Bone	- Within normal limits.
			Brain	- Within normal limits.
			Heart	- Within normal limits.
			Kidney	- Chronic progressive nephropathy, multifocal, unilateral, mild.
			Liver	- Glycogen deposition, increased, multifocal, trace.
			Lung	- Peribronchial lymphoid infiltration, multifocal, mild.
			Ovary	- Within normal limits.
			Stomach-Glandular	- Within normal limits.
			Stomach-Nonglandular	- Within normal limits.
			Uterus	- Fibrosis, generalized, bilateral, mild.
			Uterus, cervix	- Within normal limits.
18089	F	S	MACROSCOPIC:	
			All Tissues	- Within normal limits.
			MICROSCOPIC:	
			ALL TISSUES	- HISTOPATHOLOGY NOT REQUIRED.

[1]FATE CODES: S=SCHEDULED SACRIFICE E=SACRIFICED IN EXTREMIS D=DIED ON STUDY

2356

INDIVIDUAL ANIMAL DATA RECORD: PATHOLOGY
0 - Termination: Rats

GROUP, ANIMAL NUMBER	SEX	FATE[1]	TISSUE:	OBSERVATIONS:
0.075 mg/kg/day				
18090	F	D	MACROSCOPIC:	
			Uterus	- Intrauterine hemorrhage, confined to one horn, moderate.
			Cause of death	- Undetermined.
			MICROSCOPIC:	
			Uterus	- Inflammation, chronic, generalized, moderate.
18091	F	S	MACROSCOPIC:	
			All tissues	- Within normal limits.
			MICROSCOPIC:	
			Adrenal, cortex	- Within normal limits.
			Adrenal, medulla	- Within normal limits.
			Bone	- Within normal limits.
			Brain	- Within normal limits.
			Heart	- Within normal limits.
			Kidney	- Within normal limits.
			Liver	- Within normal limits.
			Lung	- Peribronchial lymphoid infiltration, multifocal, trace.
			Ovary	- Within normal limits.
			Stomach-Glandular	- Within normal limits.
			Stomach-Nonglandular	- Within normal limits.
			Uterus	- Within normal limits.
			Uterus, cervix	- Within normal limits.
18092	F	S	MACROSCOPIC:	
			All tissues	- Within normal limits.
			MICROSCOPIC:	
			Adrenal, cortex	- Within normal limits.
			Adrenal, medulla	- Within normal limits.
			Bone	- Within normal limits.
			Brain	- Within normal limits.
			Heart	- Within normal limits.
			Kidney	- Chronic progressive nephropathy, multifocal, bilateral, mild.
				- pelvis, Microconcretion, focal, unilateral, mild.
			Liver	- Within normal limits.
			Lung	- Interstitial tissue, inflammation, chronic, multifocal, trace.

[1]FATE CODES: S=SCHEDULED SACRIFICE E=SACRIFICED IN EXTREMIS D=DIED ON STUDY

INDIVIDUAL ANIMAL DATA RECORD: PATHOLOGY
0 - Termination: Rats

GROUP, ANIMAL NUMBER	SEX	FATE[1]	TISSUE:	OBSERVATIONS:
0.075 mg/kg/day				
18092	F	S	MICROSCOPIC: (CONTINUED)	
			Ovary	- Within normal limits.
			Stomach-Glandular	- Within normal limits.
			Stomach-Nonglandular	- Within normal limits.
			Uterus	- Fibrosis, generalized, bilateral, mild.
			Uterus, cervix	- Within normal limits.
18093	F	D	MACROSCOPIC:	
			All tissues	- Within normal limits.
			MICROSCOPIC:	
			ALL TISSUES	- HISTOPATHOLOGY NOT REQUIRED.
18094	F	D	MACROSCOPIC:	
			Abdominal Cavity	- Two fetuses, free in cavity; Hemoperitoneum, about 2 cc of blood, mild.
			Kidney	- Hemorrhagic, bilateral, severe, medulla.
			Stomach	- Black foci, pinpoint to 3 mm diameter, several, moderate.
			Uterus	- Rupture, mild, body; Hemorrhage, around ruptured margins; Cause of death.
			MICROSCOPIC:	
			Kidney	- Congestion, generalized, bilateral, moderate.
			Stomach-Glandular	- Ulcer, multifocal, mild.
			Uterus	- Inflammation, chronic, generalized, mild.
				- Edema, generalized, mild.
				- Congestion, generalized, moderate.
18095	F	D	MACROSCOPIC:	
			All tissues	- Within normal limits.
			MICROSCOPIC:	
			ALL TISSUES	- HISTOPATHOLOGY NOT REQUIRED.

[1]FATE CODES: S=SCHEDULED SACRIFICE E=SACRIFICED IN EXTREMIS D=DIED ON STUDY

INDIVIDUAL ANIMAL DATA RECORD: PATHOLOGY
0 - Termination: Rats

GROUP, ANIMAL NUMBER	SEX	FATE[1]	TISSUE:	OBSERVATIONS:
0.075 mg/kg/day				
18096	F	S	MACROSCOPIC:	
			All Tissues	- Within normal limits.
			MICROSCOPIC:	
			Adrenal, cortex	- Within normal limits.
			Adrenal, medulla	- Within normal limits.
			Bone	- Within normal limits.
			Brain	- Within normal limits.
			Heart	- Within normal limits.
			Kidney	- Chronic progressive nephropathy, multifocal, bilateral, trace.
			Liver	- Within normal limits.
			Lung	- Peribronchial lymphoid infiltration, multifocal, trace.
			Ovary	- Within normal limits.
			Stomach-Glandular	- Within normal limits.
			Stomach-Nonglandular	- Within normal limits.
			Uterus	- Fibrosis, generalized, bilateral, mild.
			Uterus, cervix	- Within normal limits.

[1]FATE CODES: S=SCHEDULED SACRIFICE E=SACRIFICED IN EXTREMIS D=DIED ON STUDY

INDIVIDUAL ANIMAL DATA RECORD: PATHOLOGY
0 - Termination: Rats

GROUP, ANIMAL NUMBER	SEX	FATE[1]	TISSUE:	OBSERVATIONS:
0 mg/kg/day				
17933m	M	S	MACROSCOPIC: All Tissues	- Within normal limits.
			MICROSCOPIC: ALL TISSUES	- HISTOPATHOLOGY NOT REQUIRED.
17937m	M	S	MACROSCOPIC: All Tissues	- Within normal limits.
			MICROSCOPIC: ALL TISSUES	- HISTOPATHOLOGY NOT REQUIRED.
17939m	M	S	MACROSCOPIC: All Tissues	- Within normal limits.
			MICROSCOPIC: ALL TISSUES	- HISTOPATHOLOGY NOT REQUIRED.
17947m	M	S	MACROSCOPIC: All Tissues	- Within normal limits.
			MICROSCOPIC: ALL TISSUES	- HISTOPATHOLOGY NOT REQUIRED.
17960m	M	S	MACROSCOPIC: All Tissues	- Within normal limits.
			MICROSCOPIC: ALL TISSUES	- HISTOPATHOLOGY NOT REQUIRED.
17935f	F	S	MACROSCOPIC: Lung	- Hemorrhage, 1 to 2 mm, focal, bilateral, trace.
			MICROSCOPIC: ALL TISSUES	- HISTOPATHOLOGY NOT REQUIRED.
17938f	F	S	MACROSCOPIC: All Tissues	- Within normal limits.
			MICROSCOPIC: ALL TISSUES	- HISTOPATHOLOGY NOT REQUIRED.

[1]FATE CODES: S=SCHEDULED SACRIFICE E=SACRIFICED IN EXTREMIS D=DIED ON STUDY

INDIVIDUAL ANIMAL DATA RECORD: PATHOLOGY
0 - Termination: Rats

GROUP, ANIMAL NUMBER	SEX	FATE[1]	TISSUE:	OBSERVATIONS:
0 mg/kg/day				
17946f	F	S	MACROSCOPIC: Lung	- Hemorrhage, focal, bilateral, trace.
			MICROSCOPIC: ALL TISSUES	- HISTOPATHOLOGY NOT REQUIRED.
17948f	F	S	MACROSCOPIC: Lung	- Hemorrhages, mild.
			MICROSCOPIC: ALL TISSUES	- HISTOPATHOLOGY NOT REQUIRED.
17950f	F	S	MACROSCOPIC: All Tissues	- Within normal limits.
			MICROSCOPIC: ALL TISSUES	- HISTOPATHOLOGY NOT REQUIRED.

 [1]FATE CODES: S=SCHEDULED SACRIFICE E=SACRIFICED IN EXTREMIS D=DIED ON STUDY

INDIVIDUAL ANIMAL DATA RECORD: PATHOLOGY
0 - Termination: Rats

GROUP, ANIMAL NUMBER	SEX	FATE[1]	TISSUE:	OBSERVATIONS:
0.005 mg/kg/day				
17979m	M	S	MACROSCOPIC: ATT Tissues	- Within normal limits.
			MICROSCOPIC: ALL TISSUES	- HISTOPATHOLOGY NOT REQUIRED.
17985m	M	S	MACROSCOPIC: ATT Tissues	- Within normal limits.
			MICROSCOPIC: ALL TISSUES	- HISTOPATHOLOGY NOT REQUIRED.
17989m	M	S	MACROSCOPIC: ATT Tissues	- Within normal limits.
			MICROSCOPIC: ALL TISSUES	- HISTOPATHOLOGY NOT REQUIRED.
17995m	M	S	MACROSCOPIC: ATT Tissues	- Within normal limits.
			MICROSCOPIC: ALL TISSUES	- HISTOPATHOLOGY NOT REQUIRED.
18002m	M	S	MACROSCOPIC: ATT Tissues	- Within normal limits.
			MICROSCOPIC: ALL TISSUES	- HISTOPATHOLOGY NOT REQUIRED.
17982f	F	S	MACROSCOPIC: ATT Tissues	- Within normal limits.
			MICROSCOPIC: ALL TISSUES	- HISTOPATHOLOGY NOT REQUIRED.
17987f	F	S	MACROSCOPIC: ATT Tissues	- Within normal limits.
			MICROSCOPIC: ALL TISSUES	- HISTOPATHOLOGY NOT REQUIRED.

[1]FATE CODES: S=SCHEDULED SACRIFICE E=SACRIFICED IN EXTREMIS D=DIED ON STUDY

INDIVIDUAL ANIMAL DATA RECORD: PATHOLOGY
0 - Termination: Rats

GROUP, ANIMAL NUMBER	SEX	FATE[1]	TISSUE:	OBSERVATIONS:
0.005 mg/kg/day				
17990f	F	S	MACROSCOPIC:	
			Eye	- Left, enlarged approximately 3 x, moderate.
				- Internal, left, hemorrhage, mild.
			Lung	- Hemorrhage, 1 mm, focal, unilateral, trace.
			MICROSCOPIC:	
			ALL TISSUES	- HISTOPATHOLOGY NOT REQUIRED.
17991f	F	S	MACROSCOPIC:	
			All Tissues	- Within normal limits.
			MICROSCOPIC:	
			ALL TISSUES	- HISTOPATHOLOGY NOT REQUIRED.
18000f	F	S	MACROSCOPIC:	
			All Tissues	- Within normal limits.
			MICROSCOPIC:	
			ALL TISSUES	- HISTOPATHOLOGY NOT REQUIRED.
18006f	F	S	MACROSCOPIC:	
			All Tissues	- Within normal limits.
			MICROSCOPIC:	
			ALL TISSUES	- HISTOPATHOLOGY NOT REQUIRED.

INDIVIDUAL ANIMAL DATA RECORD: PATHOLOGY
0 - Termination: Rats

GROUP, ANIMAL NUMBER	SEX	FATE[1]	TISSUE:	OBSERVATIONS:
0.015 mg/kg/day				
18023m	M	S	MACROSCOPIC: All Tissues	- Within normal limits.
			MICROSCOPIC: ALL TISSUES	- HISTOPATHOLOGY NOT REQUIRED.
18026m	M	S	MACROSCOPIC: All Tissues	- Within normal limits.
			MICROSCOPIC: ALL TISSUES	- HISTOPATHOLOGY NOT REQUIRED.
18037m	M	S	MACROSCOPIC: Lung	- Anterior, red, firm, bilateral, mild.
			MICROSCOPIC: ALL TISSUES	- HISTOPATHOLOGY NOT REQUIRED.
18043m	M	S	MACROSCOPIC: All Tissues	- Within normal limits.
			MICROSCOPIC: ALL TISSUES	- HISTOPATHOLOGY NOT REQUIRED.
18046m	M	S	MACROSCOPIC: All Tissues	- Within normal limits.
			MICROSCOPIC: ALL TISSUES	- HISTOPATHOLOGY NOT REQUIRED.
18027f	F	S	MACROSCOPIC: All Tissues	- Within normal limits.
			MICROSCOPIC: ALL TISSUES	- HISTOPATHOLOGY NOT REQUIRED.
18031f	F	S	MACROSCOPIC: All Tissues	- Within normal limits.
			MICROSCOPIC: ALL TISSUES	- HISTOPATHOLOGY NOT REQUIRED.

[1]FATE CODES: S=SCHEDULED SACRIFICE E=SACRIFICED IN EXTREMIS D=DIED ON STUDY

INDIVIDUAL ANIMAL DATA RECORD: PATHOLOGY
O - Termination: Rats

GROUP, ANIMAL NUMBER	SEX	FATE[1]	TISSUE:	OBSERVATIONS:
0.015 mg/kg/day				
18040f	F	S	MACROSCOPIC: All Tissues	- Within normal limits.
			MICROSCOPIC: ALL TISSUES	- HISTOPATHOLOGY NOT REQUIRED.
18045f	F	S	MACROSCOPIC: All Tissues	- Within normal limits.
			MICROSCOPIC: ALL TISSUES	- HISTOPATHOLOGY NOT REQUIRED.
18048f	F	S	MACROSCOPIC: All Tissues	- Within normal limits.
			MICROSCOPIC: ALL TISSUES	- HISTOPATHOLOGY NOT REQUIRED.

INDIVIDUAL ANIMAL DATA RECORD: PATHOLOGY
0 - Terminations: Rats

GROUP, ANIMAL NUMBER	SEX	FATE[1]	TISSUE:	OBSERVATIONS:
0.075 mg/kg/day				
18067m	M	S	MACROSCOPIC: Lung	- Hemorrhage, 1 to 2 mm, multifocal, bilateral, mild.
			MICROSCOPIC: ALL TISSUES	- HISTOPATHOLOGY NOT REQUIRED.
18074m	M	S	MACROSCOPIC: All Tissues	- Within normal limits.
			MICROSCOPIC: ALL TISSUES	- HISTOPATHOLOGY NOT REQUIRED.
18078m	M	S	MACROSCOPIC: All Tissues	- Within normal limits.
			MICROSCOPIC: ALL TISSUES	- HISTOPATHOLOGY NOT REQUIRED.
18085m	M	S	MACROSCOPIC: All Tissues	- Within normal limits.
			MICROSCOPIC: ALL TISSUES	- HISTOPATHOLOGY NOT REQUIRED.
18091m	M	S	MACROSCOPIC: All Tissues	- Within normal limits.
			MICROSCOPIC: ALL TISSUES	- HISTOPATHOLOGY NOT REQUIRED.
18070f	F	S	MACROSCOPIC: All Tissues	- Within normal limits.
			MICROSCOPIC: ALL TISSUES	- HISTOPATHOLOGY NOT REQUIRED.
18079f	F	S	MACROSCOPIC: All Tissues	- Within normal limits.
			MICROSCOPIC: ALL TISSUES	- HISTOPATHOLOGY NOT REQUIRED.

[1]FATE CODES: S=SCHEDULED SACRIFICE E=SACRIFICED IN EXTREMIS D=DIED ON STUDY

945

INDIVIDUAL ANIMAL DATA RECORD: PATHOLOGY
0 - Termination: Rats

GROUP, ANIMAL NUMBER	SEX	FATE[1]	TISSUE:	OBSERVATIONS:
0.075 mg/kg/day				
18083f	F	S	MACROSCOPIC: ALL TISSUES	- Within normal limits.
			MICROSCOPIC: ALL TISSUES	- HISTOPATHOLOGY NOT REQUIRED.
18084f	F	S	MACROSCOPIC: ALL TISSUES	- Within normal limits.
			MICROSCOPIC: ALL TISSUES	- HISTOPATHOLOGY NOT REQUIRED.
18087f	F	S	MACROSCOPIC: ALL TISSUES	- Within normal limits.
			MICROSCOPIC: ALL TISSUES	- HISTOPATHOLOGY NOT REQUIRED.

 [1]FATE CODES: S=SCHEDULED SACRIFICE E=SACRIFICED IN EXTREMIS D=DIED ON STUDY

INDIVIDUAL ANIMAL DATA RECORD: PATHOLOGY
0 - Termination: Rats

GROUP, ANIMAL NUMBER	SEX	FATE[1]	TISSUE:	OBSERVATIONS:
0 mg/kg/day				
17932F	F	S	MACROSCOPIC:	
			All Tissues	- Within normal limits.
			MICROSCOPIC:	
			Adrenal, cortex	- Within normal limits.
			Adrenal, medulla	- Within normal limits.
			Bone	- Within normal limits.
			Brain	- Within normal limits.
			Heart	- Within normal limits.
			Kidney	- Cyst, focal, unilateral, trace.
			Liver	- Within normal limits.
			Lung	- Within normal limits.
			Ovary	- Within normal limits.
			Stomach-Glandular	- Within normal limits.
			Stomach-Nonglandular	- Within normal limits.
			Uterus	- Within normal limits.
			Uterus, cervix	- Within normal limits.
17933M	M	S	MACROSCOPIC:	
			All Tissues	- Within normal limits.
			MICROSCOPIC:	
			Adrenal, cortex	- Within normal limits.
			Adrenal, medulla	- Within normal limits.
			Bone	- Within normal limits.
			Brain	- Within normal limits.
			Epididymis	- Within normal limits.
			Heart	- Within normal limits.
			Kidney	- Within normal limits.
			Liver	- Within normal limits.
			Lung	- Within normal limits.
			Prostate	- Within normal limits.
			Seminal Vesicle	- Within normal limits.
			Stomach-Glandular	- Within normal limits.
			Stomach-Nonglandular	- Within normal limits.
			Testis	- Within normal limits.

[1]FATE CODES: S=SCHEDULED SACRIFICE E=SACRIFICED IN EXTREMIS D=DIED ON STUDY

INDIVIDUAL ANIMAL DATA RECORD: PATHOLOGY
0 - Termination: Rats

GROUP, ANIMAL NUMBER	SEX	FATE[1]	TISSUE:	OBSERVATIONS:
0 mg/kg/day				
17935F	F	S	MACROSCOPIC:	
			All Tissues	- Within normal limits.
			MICROSCOPIC:	
			Adrenal, cortex	- Within normal limits.
			Adrenal, medulla	- Within normal limits.
			Bone	- Within normal limits.
			Brain	- Within normal limits.
			Heart	- Within normal limits.
			Kidney	- Within normal limits.
			Liver	- Within normal limits.
			Lung	- Within normal limits.
			Ovary	- Within normal limits.
			Stomach-Glandular	- Within normal limits.
			Stomach-Nonglandular	- Within normal limits.
			Uterus	- Within normal limits.
			Uterus, cervix	- Within normal limits.
17936F	F	S	MACROSCOPIC:	
			All Tissues	- Within normal limits.
			MICROSCOPIC:	
			Adrenal, cortex	- Within normal limits.
			Adrenal, medulla	- Within normal limits.
			Bone	- Within normal limits.
			Brain	- Within normal limits.
			Heart	- Within normal limits.
			Kidney	- Within normal limits.
			Liver	- Within normal limits.
			Lung	- Within normal limits.
			Ovary	- Within normal limits.
			Stomach-Glandular	- Within normal limits.
			Stomach-Nonglandular	- Within normal limits.
			Uterus	- Within normal limits.
			Uterus, cervix	- Within normal limits.

[1]FATE CODES: S=SCHEDULED SACRIFICE E=SACRIFICED IN EXTREMIS D=DIED ON STUDY

INDIVIDUAL ANIMAL DATA RECORD: PATHOLOGY
0 - Termination: Rats

GROUP, ANIMAL NUMBER	SEX	FATE[1]	TISSUE:	OBSERVATIONS:
0 mg/kg/day				
17936M	M	S	MACROSCOPIC:	
			All Tissues	- Within normal limits.
			MICROSCOPIC:	
			Adrenal, cortex	- Within normal limits.
			Adrenal, medulla	- Within normal limits.
			Bone	- Within normal limits.
			Brain	- Within normal limits.
			Epididymis	- Within normal limits.
			Heart	- Within normal limits.
			Kidney	- Within normal limits.
			Liver	- Within normal limits.
			Lung	- Within normal limits.
			Prostate	- Within normal limits.
			Seminal Vesicle	- Within normal limits.
			Stomach-Glandular	- Within normal limits.
			Stomach-Nonglandular	- Within normal limits.
			Testis	- Within normal limits.
17937M	M	S	MACROSCOPIC:	
			All Tissues	- Within normal limits.
			MICROSCOPIC:	
			Adrenal, cortex	- Within normal limits.
			Adrenal, medulla	- Within normal limits.
			Bone	- Within normal limits.
			Brain	- Within normal limits.
			Epididymis	- Within normal limits.
			Heart	- Within normal limits.
			Kidney	- Within normal limits.
			Liver	- Within normal limits.
			Lung	- Within normal limits.
			Prostate	- Within normal limits.
			Seminal Vesicle	- Within normal limits.
			Stomach-Glandular	- Within normal limits.
			Stomach-Nonglandular	- Within normal limits.
			Testis	- Within normal limits.

[1]FATE CODES: S=SCHEDULED SACRIFICE E=SACRIFICED IN EXTREMIS D=DIED ON STUDY

INDIVIDUAL ANIMAL DATA RECORD: PATHOLOGY
0 - Termination: Rats

GROUP, ANIMAL NUMBER	SEX	FATE[1]	TISSUE:	OBSERVATIONS:
0 mg/kg/day				
17938F	F	S	MACROSCOPIC:	
			All Tissues	- Within normal limits.
			MICROSCOPIC:	
			Adrenal, cortex	- Within normal limits.
			Adrenal, medulla	- Within normal limits.
			Bone	- Within normal limits.
			Brain	- Within normal limits.
			Heart	- Within normal limits.
			Kidney	- Within normal limits.
			Liver	- Within normal limits.
			Lung	- Within normal limits.
			Ovary	- Within normal limits.
			Stomach-Glandular	- Within normal limits.
			Stomach-Nonglandular	- Within normal limits.
			Uterus	- Within normal limits.
			Uterus, cervix	- Within normal limits.
17939M	M	S	MACROSCOPIC:	
			All Tissues	- Within normal limits.
			MICROSCOPIC:	
			Adrenal, cortex	- Within normal limits.
			Adrenal, medulla	- Within normal limits.
			Bone	- Within normal limits.
			Brain	- Within normal limits.
			Epididymis	- Within normal limits.
			Heart	- Within normal limits.
			Kidney	- Within normal limits.
			Liver	- Within normal limits.
			Lung	- Within normal limits.
			Prostate	- Within normal limits.
			Seminal Vesicle	- Within normal limits.
			Stomach-Glandular	- Within normal limits.
			Stomach-Nonglandular	- Within normal limits.
			Testis	- Within normal limits.

[1]FATE CODES: S=SCHEDULED SACRIFICE E=SACRIFICED IN EXTREMIS D=DIED ON STUDY

INDIVIDUAL ANIMAL DATA RECORD: PATHOLOGY
0 - Termination: Rats

GROUP, ANIMAL NUMBER	SEX	FATE[1]	TISSUE:	OBSERVATIONS:
0 mg/kg/day				
17941M	M	S	MACROSCOPIC:	
			All Tissues	- Within normal limits.
			MICROSCOPIC:	
			Adrenal, cortex	- Within normal limits.
			Adrenal, medulla	- Within normal limits.
			Bone	- Within normal limits.
			Brain	- Within normal limits.
			Epididymis	- Within normal limits.
			Heart	- Within normal limits.
			Kidney	- Within normal limits.
			Liver	- Within normal limits.
			Lung	- Within normal limits.
			Prostate	- Within normal limits.
			Seminal Vesicle	- Within normal limits.
			Stomach-Glandular	- Within normal limits.
			Stomach-Nonglandular	- Within normal limits.
			Testis	- Within normal limits.
17942F	F	S	MACROSCOPIC:	
			All Tissues	- Within normal limits.
			MICROSCOPIC:	
			Adrenal, cortex	- Within normal limits.
			Adrenal, medulla	- Within normal limits.
			Bone	- Within normal limits.
			Brain	- Within normal limits.
			Heart	- Within normal limits.
			Kidney	- Within normal limits.
			Liver	- Glycogen deposition, increased, generalized, mild.
			Lung	- Within normal limits.
			Ovary	- Within normal limits.
			Stomach-Glandular	- Within normal limits.
			Stomach-Nonglandular	- Within normal limits.
			Uterus	- Within normal limits.
			Uterus, cervix	- Within normal limits.

[1]FATE CODES: S=SCHEDULED SACRIFICE E=SACRIFICED IN EXTREMIS D=DIED ON STUDY

GROUP, ANIMAL NUMBER	SEX	FATE[1]	TISSUE:	OBSERVATIONS:
0 mg/kg/day				
17942M	M	S	MACROSCOPIC:	
			All Tissues	- Within normal limits.
			MICROSCOPIC:	
			Adrenal, cortex	- Within normal limits.
			Adrenal, medulla	- Within normal limits.
			Bone	- Within normal limits.
			Brain	- Within normal limits.
			Epididymis	- Within normal limits.
			Heart	- Within normal limits.
			Kidney	- Within normal limits.
			Liver	- Within normal limits.
			Lung	- Within normal limits.
			Prostate	- Within normal limits.
			Seminal Vesicle	- Within normal limits.
			Stomach-Glandular	- Within normal limits.
			Stomach-Nonglandular	- Within normal limits.
			Testis	- Within normal limits.
17943M	M	S	MACROSCOPIC:	
			All Tissues	- Within normal limits.
			MICROSCOPIC:	
			Adrenal, cortex	- Within normal limits.
			Adrenal, medulla	- Within normal limits.
			Bone	- Within normal limits.
			Brain	- Within normal limits.
			Epididymis	- Within normal limits.
			Heart	- Within normal limits.
			Kidney	- Within normal limits.
			Liver	- Within normal limits.
			Lung	- Within normal limits.
			Prostate	- Within normal limits.
			Seminal Vesicle	- Within normal limits.
			Stomach-Glandular	- Within normal limits.
			Stomach-Nonglandular	- Within normal limits.
			Testis	- Within normal limits.

[1]FATE CODES: S=SCHEDULED SACRIFICE E=SACRIFICED IN EXTREMIS D=DIED ON STUDY

INDIVIDUAL ANIMAL DATA RECORD: PATHOLOGY
0 - Termination: Rats

GROUP, ANIMAL NUMBER	SEX	FATE[1]	TISSUE:	OBSERVATIONS:
0 mg/kg/day				
17948M	M	S	MACROSCOPIC:	
			Kidney	- Pelvic dilatation, bilateral, trace.
			MICROSCOPIC:	
			Adrenal, cortex	- Within normal limits.
			Adrenal, medulla	- Within normal limits.
			Bone	- Within normal limits.
			Brain	- Within normal limits.
			Epididymis	- Within normal limits.
			Heart	- Within normal limits.
			Kidney	- Within normal limits.
			Liver	- Within normal limits.
			Lung	- Within normal limits.
			Prostate	- Within normal limits.
			Seminal Vesicle	- Within normal limits.
			Stomach-Glandular	- Within normal limits.
			Stomach-Nonglandular	- Within normal limits.
			Testis	- Within normal limits.
17949F	F	S	MACROSCOPIC:	
			All Tissues	- Within normal limits.
			MICROSCOPIC:	
			Adrenal, cortex	- Within normal limits.
			Adrenal, medulla	- Within normal limits.
			Bone	- Within normal limits.
			Brain	- Within normal limits.
			Heart	- Within normal limits.
			Kidney	- Within normal limits.
			Liver	- Within normal limits.
			Lung	- Within normal limits.
			Ovary	- Not in plane of section.
			Stomach-Glandular	- Within normal limits.
			Stomach-Nonglandular	- Within normal limits.
			Uterus	- Within normal limits.
			Uterus, cervix	- Within normal limits.

[1]FATE CODES: S=SCHEDULED SACRIFICE E=SACRIFICED IN EXTREMIS D=DIED ON STUDY

INDIVIDUAL ANIMAL DATA RECORD: PATHOLOGY
0 - Termination: Rats

GROUP, ANIMAL NUMBER	SEX	FATE[1]	TISSUE:	OBSERVATIONS:
0 mg/kg/day				
17950M	M	S	MACROSCOPIC:	
			All Tissues	- Within normal limits.
			MICROSCOPIC:	
			Adrenal, cortex	- Within normal limits.
			Adrenal, medulla	- Within normal limits.
			Bone	- Within normal limits.
			Brain	- Within normal limits.
			Epididymis	- Within normal limits.
			Heart	- Within normal limits.
			Kidney	- Within normal limits.
			Liver	- Within normal limits.
			Lung	- Within normal limits.
			Prostate	- Within normal limits.
			Seminal Vesicle	- Within normal limits.
			Stomach-Glandular	- Within normal limits.
			Stomach-Nonglandular	- Within normal limits.
			Testis	- Within normal limits.
17953F	F	S	MACROSCOPIC:	
			All Tissues	- Within normal limits.
			MICROSCOPIC:	
			Adrenal, cortex	- Within normal limits.
			Adrenal, medulla	- Within normal limits.
			Bone	- Within normal limits.
			Brain	- Within normal limits.
			Heart	- Within normal limits.
			Kidney	- Within normal limits.
			Liver	- Within normal limits.
			Lung	- Within normal limits.
			Ovary	- Within normal limits.
			Stomach-Glandular	- Within normal limits.
			Stomach-Nonglandular	- Within normal limits.
			Uterus	- Within normal limits.
			Uterus, cervix	- Within normal limits.

[1]FATE CODES: S=SCHEDULED SACRIFICE E=SACRIFICED IN EXTREMIS D=DIED ON STUDY

INDIVIDUAL ANIMAL DATA RECORD: PATHOLOGY
0 - Termination: Rats

GROUP, ANIMAL NUMBER	SEX	FATE[1]	TISSUE:	OBSERVATIONS:
0 mg/kg/day				
17954F	F	S	MACROSCOPIC:	
			All tissues	- Within normal limits.
			MICROSCOPIC:	
			Adrenal, cortex	- Within normal limits.
			Adrenal, medulla	- Within normal limits.
			Bone	- Within normal limits.
			Brain	- Within normal limits.
			Heart	- Within normal limits.
			Kidney	- Within normal limits.
			Liver	- Within normal limits.
			Lung	- Within normal limits.
			Ovary	- Within normal limits.
			Stomach-Glandular	- Within normal limits.
			Stomach-Nonglandular	- Within normal limits.
			Uterus	- Within normal limits.
			Uterus, cervix	- Within normal limits.
17956F	F	S	MACROSCOPIC:	
			All tissues	- Within normal limits.
			MICROSCOPIC:	
			Adrenal, cortex	- Within normal limits.
			Adrenal, medulla	- Within normal limits.
			Bone	- Within normal limits.
			Brain	- Within normal limits.
			Heart	- Within normal limits.
			Kidney	- Within normal limits.
			Liver	- Within normal limits.
			Lung	- Within normal limits.
			Ovary	- Within normal limits.
			Stomach-Glandular	- Within normal limits.
			Stomach-Nonglandular	- Within normal limits.
			Uterus	- Within normal limits.
			Uterus, cervix	- Within normal limits.

[1]FATE CODES: S=SCHEDULED SACRIFICE E=SACRIFICED IN EXTREMIS D=DIED ON STUDY

GROUP, ANIMAL NUMBER	SEX	FATE[1]	TISSUE:	OBSERVATIONS:
0 mg/kg/day				
17959M	M	S	MACROSCOPIC:	
			All Tissues	- Within normal limits.
			MICROSCOPIC:	
			Adrenal, cortex	- Within normal limits.
			Adrenal, medulla	- Within normal limits.
			Bone	- Within normal limits.
			Brain	- Within normal limits.
			Epididymis	- Within normal limits.
			Heart	- Within normal limits.
			Kidney	- Cyst, focal, unilateral, trace.
			Liver	- Within normal limits.
			Lung	- Within normal limits.
			Prostate	- Within normal limits.
			Seminal Vesicle	- Within normal limits.
			Stomach-Glandular	- Within normal limits.
			Stomach-Nonglandular	- Within normal limits.
			Testis	- Within normal limits.
17961F	F	S	MACROSCOPIC:	
			All Tissues	- Within normal limits.
			MICROSCOPIC:	
			Adrenal, cortex	- Within normal limits.
			Adrenal, medulla	- Within normal limits.
			Bone	- Within normal limits.
			Brain	- Within normal limits.
			Heart	- Within normal limits.
			Kidney	- Within normal limits.
			Liver	- Within normal limits.
			Lung	- Within normal limits.
			Ovary	- Within normal limits.
			Stomach-Glandular	- Within normal limits.
			Stomach-Nonglandular	- Within normal limits.
			Uterus	- Within normal limits.
			Uterus, cervix	- Within normal limits.

[1]FATE CODES: S=SCHEDULED SACRIFICE E=SACRIFICED IN EXTREMIS D=DIED ON STUDY

INDIVIDUAL ANIMAL DATA RECORD: PATHOLOGY
0 - Termination: Rats

GROUP, ANIMAL NUMBER	SEX	FATE[1]	TISSUE:	OBSERVATIONS:
0.005 mg/kg/day				
17978M	M	S	MACROSCOPIC: ALL TISSUES	- Within normal limits.
			MICROSCOPIC: ALL TISSUES	- HISTOPATHOLOGY NOT REQUIRED.
17980F	F	S	MACROSCOPIC: ALL TISSUES	- Within normal limits.
			MICROSCOPIC: ALL TISSUES	- HISTOPATHOLOGY NOT REQUIRED.
17985M	M	S	MACROSCOPIC: ALL TISSUES	- Within normal limits.
			MICROSCOPIC: ALL TISSUES	- HISTOPATHOLOGY NOT REQUIRED.
17986M	M	S	MACROSCOPIC: ALL TISSUES	- Within normal limits.
			MICROSCOPIC: ALL TISSUES	- HISTOPATHOLOGY NOT REQUIRED.
17987M	M	S	MACROSCOPIC: ALL TISSUES	- Within normal limits.
			MICROSCOPIC: ALL TISSUES	- HISTOPATHOLOGY NOT REQUIRED.

[1]FATE CODES: S=SCHEDULED SACRIFICE E=SACRIFICED IN EXTREMIS D=DIED ON STUDY

INDIVIDUAL ANIMAL DATA RECORD: PATHOLOGY
0 - Termination: Rats

GROUP, ANIMAL NUMBER	SEX	FATE[1]	TISSUE:	OBSERVATIONS:
0.005 mg/kg/day				
17988M	M	S	MACROSCOPIC: ALL TISSUES	- Within normal limits.
			MICROSCOPIC: ALL TISSUES	- HISTOPATHOLOGY NOT REQUIRED.
17990M	M	S	MACROSCOPIC: ALL TISSUES	- Within normal limits.
			MICROSCOPIC: ALL TISSUES	- HISTOPATHOLOGY NOT REQUIRED.
17991F	F	S	MACROSCOPIC: ALL TISSUES	- Within normal limits.
			MICROSCOPIC: ALL TISSUES	- HISTOPATHOLOGY NOT REQUIRED.
17991M	M	S	MACROSCOPIC: ALL TISSUES	- Within normal limits.
			MICROSCOPIC: ALL TISSUES	- HISTOPATHOLOGY NOT REQUIRED.
17992M	M	S	MACROSCOPIC: ALL TISSUES	- Within normal limits.
			MICROSCOPIC: ALL TISSUES	- HISTOPATHOLOGY NOT REQUIRED.

[1]FATE CODES: S=SCHEDULED SACRIFICE E=SACRIFICED IN EXTREMIS D=DIED ON STUDY

3.58

INDIVIDUAL ANIMAL DATA RECORD: PATHOLOGY
0 - Termination: Rats

GROUP, ANIMAL NUMBER	SEX	FATE[1]	TISSUE:	OBSERVATIONS:
0.005 mg/kg/day				
17994F	F	S	MACROSCOPIC: ALL TISSUES	- Within normal limits.
			MICROSCOPIC: ALL TISSUES	- HISTOPATHOLOGY NOT REQUIRED.
17995M	M	S	MACROSCOPIC: ALL TISSUES	- Within normal limits.
			MICROSCOPIC: ALL TISSUES	- HISTOPATHOLOGY NOT REQUIRED.
17996F	F	S	MACROSCOPIC: ALL TISSUES	- Within normal limits.
			MICROSCOPIC: ALL TISSUES	- HISTOPATHOLOGY NOT REQUIRED.
17997F	F	S	MACROSCOPIC: ALL TISSUES	- Within normal limits.
			MICROSCOPIC: ALL TISSUES	- HISTOPATHOLOGY NOT REQUIRED.
17998F	F	S	MACROSCOPIC: ALL TISSUES	- Within normal limits.
			MICROSCOPIC: ALL TISSUES	- HISTOPATHOLOGY NOT REQUIRED.

[1]FATE CODES: S=SCHEDULED SACRIFICE E=SACRIFICED IN EXTREMIS D=DIED ON STUDY

INDIVIDUAL ANIMAL DATA RECORD: PATHOLOGY
0 - Termination: Rats

GROUP, ANIMAL NUMBER	SEX	FATE[1]	TISSUE:	OBSERVATIONS:
0.005 mg/kg/day				
18000M	M	S	MACROSCOPIC: All Tissues	- Within normal limits.
			MICROSCOPIC: ALL TISSUES	- HISTOPATHOLOGY NOT REQUIRED.
18001F	F	S	MACROSCOPIC: All Tissues	- Within normal limits.
			MICROSCOPIC: ALL TISSUES	- HISTOPATHOLOGY NOT REQUIRED.
18002F	F	S	MACROSCOPIC: All Tissues	- Within normal limits.
			MICROSCOPIC: ALL TISSUES	- HISTOPATHOLOGY NOT REQUIRED.
18004F	F	S	MACROSCOPIC: All Tissues	- Within normal limits.
			MICROSCOPIC: ALL TISSUES	- HISTOPATHOLOGY NOT REQUIRED.
18006F	F	S	MACROSCOPIC: All Tissues	- Within normal limits.
			MICROSCOPIC: ALL TISSUES	- HISTOPATHOLOGY NOT REQUIRED.

[1]FATE CODES: S=SCHEDULED SACRIFICE E=SACRIFICED IN EXTREMIS D=DIED ON STUDY

INDIVIDUAL ANIMAL DATA RECORD: PATHOLOGY
0 - Termination: Rats

GROUP, ANIMAL NUMBER	SEX	FATE[1]	TISSUE:	OBSERVATIONS:
0.015 mg/kg/day				
18022M	M	S	MACROSCOPIC: All Tissues	- Within normal limits.
			MICROSCOPIC: ALL TISSUES	- HISTOPATHOLOGY NOT REQUIRED.
18023M	M	S	MACROSCOPIC: All Tissues	- Within normal limits.
			MICROSCOPIC: ALL TISSUES	- HISTOPATHOLOGY NOT REQUIRED.
18024M	M	S	MACROSCOPIC: All Tissues	- Within normal limits.
			MICROSCOPIC: ALL TISSUES	- HISTOPATHOLOGY NOT REQUIRED.
18027M	M	S	MACROSCOPIC: All Tissues	- Within normal limits.
			MICROSCOPIC: ALL TISSUES	- HISTOPATHOLOGY NOT REQUIRED.
18028F	F	S	MACROSCOPIC: Kidney	- Hydronephrosis, unilateral, mild.
			MICROSCOPIC: ALL TISSUES	- HISTOPATHOLOGY NOT REQUIRED.

[1]FATE CODES: S=SCHEDULED SACRIFICE E=SACRIFICED IN EXTREMIS D=DIED ON STUDY

INDIVIDUAL ANIMAL DATA RECORD: PATHOLOGY
0 - Termination: Rats

GROUP, ANIMAL NUMBER	SEX	FATE[1]	TISSUE:	OBSERVATIONS:
0.015 mg/kg/day				
18031M	M	S	MACROSCOPIC: ALL TISSUES	- Within normal limits.
			MICROSCOPIC: ALL TISSUES	- HISTOPATHOLOGY NOT REQUIRED.
18032F	F	S	MACROSCOPIC: ALL TISSUES	- Within normal limits.
			MICROSCOPIC: ALL TISSUES	- HISTOPATHOLOGY NOT REQUIRED.
18034M	M	S	MACROSCOPIC: ALL TISSUES	- Within normal limits.
			MICROSCOPIC: ALL TISSUES	- HISTOPATHOLOGY NOT REQUIRED.
18035M	M	S	MACROSCOPIC: ALL TISSUES	- Within normal limits.
			MICROSCOPIC: ALL TISSUES	- HISTOPATHOLOGY NOT REQUIRED.
18036F	F	S	MACROSCOPIC: ALL TISSUES	- Within normal limits.
			MICROSCOPIC: ALL TISSUES	- HISTOPATHOLOGY NOT REQUIRED.

[1]FATE CODES: S=SCHEDULED SACRIFICE E=SACRIFICED IN EXTREMIS D=DIED ON STUDY

36R

INDIVIDUAL ANIMAL DATA RECORD: PATHOLOGY
0 - Termination: Rats

GROUP, ANIMAL NUMBER	SEX	FATE[1]	TISSUE:	OBSERVATIONS:
0.015 mg/kg/day				
18037F	F	S	MACROSCOPIC: ALL TISSUES	- Within normal limits.
			MICROSCOPIC: ALL TISSUES	- HISTOPATHOLOGY NOT REQUIRED.
18038M	M	S	MACROSCOPIC: ALL TISSUES	- Within normal limits.
			MICROSCOPIC: ALL TISSUES	- HISTOPATHOLOGY NOT REQUIRED.
18040F	F	S	MACROSCOPIC: ALL TISSUES	- Within normal limits.
			MICROSCOPIC: ALL TISSUES	- HISTOPATHOLOGY NOT REQUIRED.
18042F	F	S	MACROSCOPIC: ALL TISSUES	- Within normal limits.
			MICROSCOPIC: ALL TISSUES	- HISTOPATHOLOGY NOT REQUIRED.
18044F	F	S	MACROSCOPIC: ALL TISSUES	- Within normal limits.
			MICROSCOPIC: ALL TISSUES	- HISTOPATHOLOGY NOT REQUIRED.

[1]FATE CODES: S=SCHEDULED SACRIFICE E=SACRIFICED IN EXTREMIS D=DIED ON STUDY

INDIVIDUAL ANIMAL DATA RECORD: PATHOLOGY
0 - Termination: Rats

GROUP, ANIMAL NUMBER	SEX	FATE[1]	TISSUE:	OBSERVATIONS:
0.015 mg/kg/day				
18045M	M	S	MACROSCOPIC: ALL TISSUES	- Within normal limits.
			MICROSCOPIC: ALL TISSUES	- HISTOPATHOLOGY NOT REQUIRED.
18046M	M	S	MACROSCOPIC: ALL TISSUES	- Within normal limits.
			MICROSCOPIC: ALL TISSUES	- HISTOPATHOLOGY NOT REQUIRED.
18047F	F	S	MACROSCOPIC: ALL TISSUES	- Within normal limits.
			MICROSCOPIC: ALL TISSUES	- HISTOPATHOLOGY NOT REQUIRED.
18048F	F	S	MACROSCOPIC: ALL TISSUES	- Within normal limits.
			MICROSCOPIC: ALL TISSUES	- HISTOPATHOLOGY NOT REQUIRED.
18050F	F	S	MACROSCOPIC: ALL TISSUES	- Within normal limits.
			MICROSCOPIC: ALL TISSUES	- HISTOPATHOLOGY NOT REQUIRED.

[1]FATE CODES: S=SCHEDULED SACRIFICE E=SACRIFICED IN EXTREMIS D=DIED ON STUDY

INDIVIDUAL ANIMAL DATA RECORD: PATHOLOGY
0 - Termination: Rats

GROUP, ANIMAL NUMBER	SEX	FATE[1]	TISSUE:	OBSERVATIONS:
0.075 mg/kg/day				
18069F	F	S	MACROSCOPIC:	
			All tissues	- Within normal limits.
			MICROSCOPIC:	
			Adrenal, cortex	- Within normal limits.
			Adrenal, medulla	- Within normal limits.
			Bone	- Within normal limits.
			Brain	- Within normal limits.
			Heart	- Within normal limits.
			Kidney	- Within normal limits.
			Liver	- Within normal limits.
			Lung	- Within normal limits.
			Ovary	- Within normal limits.
			Stomach-Glandular	- Within normal limits.
			Stomach-Nonglandular	- Within normal limits.
			Uterus	- Within normal limits.
			Uterus, cervix	- Within normal limits.
18070F	F	S	MACROSCOPIC:	
			All tissues	- Within normal limits.
			MICROSCOPIC:	
			Adrenal, cortex	- Within normal limits.
			Adrenal, medulla	- Within normal limits.
			Bone	- Within normal limits.
			Brain	- Within normal limits.
			Heart	- Within normal limits.
			Kidney	- Within normal limits.
			Liver	- Within normal limits.
			Lung	- Within normal limits.
			Ovary	- Within normal limits.
			Stomach-Glandular	- Within normal limits.
			Stomach-Nonglandular	- Within normal limits.
			Uterus	- Within normal limits.
			Uterus, cervix	- Within normal limits.

[1]FATE CODES: S=SCHEDULED SACRIFICE E=SACRIFICED IN EXTREMIS D=DIED ON STUDY

GROUP, ANIMAL NUMBER	SEX	FATE[1]	TISSUE:	OBSERVATIONS:
0.025 mg/kg/day				
18070M	M	S	MACROSCOPIC:	
			All Tissues	- Within normal limits.
			MICROSCOPIC:	
			Adrenal, cortex	- Within normal limits.
			Adrenal, medulla	- Within normal limits.
			Bone	- Within normal limits.
			Brain	- Within normal limits.
			Epididymis	- Within normal limits.
			Heart	- Within normal limits.
			Kidney	- Within normal limits.
			Liver	- Within normal limits.
			Lung	- Within normal limits.
			Prostate	- Within normal limits.
			Seminal Vesicle	- Within normal limits.
			Stomach-Glandular	- Within normal limits.
			Stomach-Nonglandular	- Within normal limits.
			Testis	- Within normal limits.
18G/2F	F	S	MACROSCOPIC:	
			All Tissues	- Within normal limits.
			MICROSCOPIC:	
			Adrenal, cortex	- Within normal limits.
			Adrenal, medulla	- Within normal limits.
			Bone	- Within normal limits.
			Brain	- Within normal limits.
			Heart	- Within normal limits.
			Kidney	- Within normal limits.
			Liver	- Within normal limits.
			Lung	- Within normal limits.
			Ovary	- Within normal limits.
				- One of pair present.
			Stomach-Glandular	- Within normal limits.
			Stomach-Nonglandular	- Within normal limits.
			Uterus	- Within normal limits.
			Uterus, cervix	- Within normal limits.

INDIVIDUAL ANIMAL DATA RECORD: PATHOLOGY
0 - Termination: Rats

GROUP, ANIMAL NUMBER	SEX	FATE[1]	TISSUE:	OBSERVATIONS:
0.075 mg/kg/day				
18072M	M	S	MACROSCOPIC:	
			All Tissues	- Within normal limits.
			MICROSCOPIC:	
			Adrenal, cortex	- Within normal limits.
			Adrenal, medulla	- Within normal limits.
			Bone	- Within normal limits.
			Brain	- Within normal limits.
			Epididymis	- Within normal limits.
			Heart	- Within normal limits.
			Kidney	- Within normal limits.
			Liver	- Within normal limits.
			Lung	- Within normal limits.
			Prostate	- Within normal limits.
			Seminal Vesicle	- Within normal limits.
			Stomach-Glandular	- Within normal limits.
			Stomach-Nonglandular	- Within normal limits.
			Testis	- Within normal limits.
18075F1	F	S	MACROSCOPIC:	
			All Tissues	- Within normal limits.
			MICROSCOPIC:	
			Adrenal, cortex	- Within normal limits.
			Adrenal, medulla	- Within normal limits.
			Bone	- Within normal limits.
			Brain	- Within normal limits.
			Heart	- Within normal limits.
			Kidney	- Within normal limits.
			Liver	- Within normal limits.
			Lung	- Within normal limits.
			Ovary	- Within normal limits.
				- One of pair present.
			Stomach-Glandular	- Within normal limits.
			Stomach-Nonglandular	- Within normal limits.
			Uterus	- Within normal limits.
			Uterus, cervix	- Within normal limits.

[1]FATE CODES: S=SCHEDULED SACRIFICE E=SACRIFICED IN EXTREMIS D=DIED ON STUDY

INDIVIDUAL ANIMAL DATA RECORD: PATHOLOGY
0 - Termination: Rats

GROUP, ANIMAL NUMBER	SEX	FATE[1]	TISSUE:	OBSERVATIONS:
0.075 mg/kg/day				
18075F2	F	S	MACROSCOPIC:	
			All tissues	- Within normal limits.
			MICROSCOPIC:	
			Adrenal, cortex	- Within normal limits.
			Adrenal, medulla	- Within normal limits.
			Bone	- Within normal limits.
			Brain	- Within normal limits.
			Heart	- Within normal limits.
			Kidney	- Within normal limits.
			Liver	- Within normal limits.
			Lung	- Within normal limits.
			Ovary	- Within normal limits.
				- One of pair present.
			Stomach-Glandular	- Within normal limits.
			Stomach-Nonglandular	- Within normal limits.
			Uterus	- Within normal limits.
			Uterus, cervix	- Within normal limits.
18075M	M	S	MACROSCOPIC:	
			All tissues	- Within normal limits.
			MICROSCOPIC:	
			Adrenal, cortex	- Within normal limits.
			Adrenal, medulla	- Within normal limits.
			Bone	- Within normal limits.
			Brain	- Within normal limits.
			Epididymis	- Within normal limits.
			Heart	- Within normal limits.
			Kidney	- Within normal limits.
			Liver	- Within normal limits.
			Lung	- Within normal limits.
			Prostate	- Not in plane of section.
			Seminal Vesicle	- Not in plane of section.
			Stomach-Glandular	- Within normal limits.
			Stomach-Nonglandular	- Within normal limits.
			Testis	- Within normal limits.

[1]FATE CODES: S=SCHEDULED SACRIFICE E=SACRIFICED IN EXTREMIS D=DIED ON STUDY

INDIVIDUAL ANIMAL DATA RECORD: PATHOLOGY
0 - Termination: Rats

GROUP, ANIMAL NUMBER	SEX	FATE[1]	TISSUE:	OBSERVATIONS:
0.075 mg/kg/day				
18078F	F	S	MACROSCOPIC:	
			All Tissues	- Within normal limits.
			MICROSCOPIC:	
			Adrenal, cortex	- Within normal limits.
			Adrenal, medulla	- Within normal limits.
			Bone	- Within normal limits.
			Brain	- Within normal limits.
			Heart	- Within normal limits.
			Kidney	- Within normal limits.
			Liver	- Within normal limits.
			Lung	- Within normal limits.
			Ovary	- Within normal limits.
			Stomach-Glandular	- Within normal limits.
			Stomach-Nonglandular	- Within normal limits.
			Uterus	- Within normal limits.
			Uterus, cervix	- Within normal limits.
18078M1	M	S	MACROSCOPIC:	
			All Tissues	- Within normal limits.
			MICROSCOPIC:	
			Adrenal, cortex	- Within normal limits.
			Adrenal, medulla	- Within normal limits.
			Bone	- Within normal limits.
			Brain	- Within normal limits.
			Epididymis	- Within normal limits.
			Heart	- Within normal limits.
			Kidney	- Within normal limits.
			Liver	- Within normal limits.
			Lung	- Within normal limits.
			Prostate	- Within normal limits.
			Seminal Vesicle	- Within normal limits.
			Stomach-Glandular	- Within normal limits.
			Stomach-Nonglandular	- Within normal limits.
			Testis	- Within normal limits.

[1]FATE CODES: S=SCHEDULED SACRIFICE E=SACRIFICED IN EXTREMIS D=DIED ON STUDY

GROUP, ANIMAL NUMBER	SEX	FATE[1]	TISSUE:	OBSERVATIONS:
0.075 mg/kg/day				
18078M2	M	S	MACROSCOPIC:	
			All Tissues	- Within normal limits.
			MICROSCOPIC:	
			Adrenal, cortex	- Within normal limits.
			Adrenal, medulla	- Within normal limits.
			Bone	- Within normal limits.
			Brain	- Within normal limits.
			Epididymis	- Within normal limits.
			Heart	- Within normal limits.
			Kidney	- Within normal limits.
			Liver	- Within normal limits.
			Lung	- Within normal limits.
			Prostate	- Within normal limits.
			Seminal Vesicle	- Within normal limits.
			Stomach-Glandular	- Within normal limits.
			Stomach-Nonglandular	- Within normal limits.
			Testis	- Within normal limits.
18083F	F	S	MACROSCOPIC:	
			All Tissues	- Within normal limits.
			MICROSCOPIC:	
			Adrenal, cortex	- Within normal limits.
			Adrenal, medulla	- Within normal limits.
			Bone	- Within normal limits.
			Brain	- Within normal limits.
			Heart	- Within normal limits.
			Kidney	- Within normal limits.
			Liver	- Within normal limits.
			Lung	- Within normal limits.
			Ovary	- Within normal limits.
			Stomach-Glandular	- Within normal limits.
			Stomach-Nonglandular	- Within normal limits.
			Uterus	- Within normal limits.
			Uterus, cervix	- Within normal limits.

[1]FATE CODES: S=SCHEDULED SACRIFICE E=SACRIFICED IN EXTREMIS D=DIED ON STUDY

GROUP, ANIMAL NUMBER	SEX	FATE[1]	TISSUE:	OBSERVATIONS:
0.075 mg/kg/day				
18083M	M	S	MACROSCOPIC:	
			All tissues	- Within normal limits.
			MICROSCOPIC:	
			Adrenal, cortex	- Within normal limits.
			Adrenal, medulla	- Within normal limits.
			Bone	- Within normal limits.
			Brain	- Within normal limits.
			Epididymis	- Within normal limits.
			Heart	- Within normal limits.
			Kidney	- Within normal limits.
			Liver	- Within normal limits.
			Lung	- Within normal limits.
			Prostate	- Within normal limits.
			Seminal Vesicle	- Within normal limits.
			Stomach-Glandular	- Within normal limits.
			Stomach-Nonglandular	- Within normal limits.
			Testis	- Within normal limits.
18085F	F	S	MACROSCOPIC:	
			All tissues	- Within normal limits.
			MICROSCOPIC:	
			Adrenal, cortex	- Within normal limits.
			Adrenal, medulla	- Within normal limits.
			Bone	- Within normal limits.
			Brain	- Within normal limits.
			Heart	- Within normal limits.
			Kidney	- Within normal limits.
			Liver	- Within normal limits.
			Lung	- Within normal limits.
			Ovary	- Within normal limits.
			Stomach-Glandular	- Within normal limits.
			Stomach-Nonglandular	- Within normal limits.
			Uterus	- Within normal limits.
			Uterus, cervix	- Within normal limits.

[1]FATE CODES: S=SCHEDULED SACRIFICE E=SACRIFICED IN EXTREMIS D=DIED ON STUDY

INDIVIDUAL ANIMAL DATA RECORD: PATHOLOGY
0 - Termination: Rats

GROUP, ANIMAL NUMBER	SEX	FATE[1]	TISSUE:	OBSERVATIONS:
0.075 mg/kg/day				
18085M	M	S	MACROSCOPIC:	
			All Tissues	- Within normal limits.
			MICROSCOPIC:	
			Adrenal, cortex	- Within normal limits.
			Adrenal, medulla	- Within normal limits.
			Bone	- Within normal limits.
			Brain	- Within normal limits.
			Epididymis	- Within normal limits.
			Heart	- Within normal limits.
			Kidney	- Within normal limits.
			Liver	- Within normal limits.
			Lung	- Within normal limits.
			Prostate	- Within normal limits.
			Seminal Vesicle	- Within normal limits.
			Stomach-Glandular	- Within normal limits.
			Stomach-Nonglandular	- Within normal limits.
			Testis	- Within normal limits.
18089F	F	S	MACROSCOPIC:	
			All Tissues	- Within normal limits.
			MICROSCOPIC:	
			Adrenal, cortex	- Within normal limits.
			Adrenal, medulla	- Within normal limits.
			Bone	- Within normal limits.
			Brain	- Within normal limits.
			Heart	- Within normal limits.
			Kidney	- Within normal limits.
			Liver	- Within normal limits.
			Lung	- Within normal limits.
			Ovary	- Within normal limits.
			Stomach-Glandular	- Within normal limits.
			Stomach-Nonglandular	- Within normal limits.
			Uterus	- Within normal limits.
			Uterus, cervix	- Within normal limits.

[1]FATE CODES: S=SCHEDULED SACRIFICE E=SACRIFICED IN EXTREMIS D=DIED ON STUDY

INDIVIDUAL ANIMAL DATA RECORD: PATHOLOGY
0 - Termination: Rats

GROUP, ANIMAL NUMBER	SEX	FATE[1]	TISSUE:	OBSERVATIONS:
0.075 mg/kg/day				
18089M1	M	S	MACROSCOPIC:	
			All Tissues	- Within normal limits.
			MICROSCOPIC:	
			Adrenal, cortex	- Within normal limits.
			Adrenal, medulla	- Within normal limits.
			Bone	- Within normal limits.
			Brain	- Within normal limits.
			Epididymis	- Within normal limits.
			Heart	- Within normal limits.
			Kidney	- Within normal limits.
			Liver	- Within normal limits.
			Lung	- Within normal limits.
			Prostate	- Within normal limits.
			Seminal Vesicle	- Within normal limits.
			Stomach-Glandular	- Within normal limits.
			Stomach-Nonglandular	- Within normal limits.
			Testis	- Within normal limits.
18089M2	M	S	MACROSCOPIC:	
			All Tissues	- Within normal limits.
			MICROSCOPIC:	
			Adrenal, cortex	- Within normal limits.
			Adrenal, medulla	- Within normal limits.
			Bone	- Within normal limits.
			Brain	- Within normal limits.
			Epididymis	- Within normal limits.
			Heart	- Within normal limits.
			Kidney	- Within normal limits.
			Liver	- Within normal limits.
			Lung	- Within normal limits.
			Prostate	- Within normal limits.
			Seminal Vesicle	- Within normal limits.
			Stomach-Glandular	- Within normal limits.
			Stomach-Nonglandular	- Within normal limits.
			Testis	- Within normal limits.

[1]FATE CODES: S=SCHEDULED SACRIFICE E=SACRIFICED IN EXTREMIS D=DIED ON STUDY

27B

GROUP, ANIMAL NUMBER	SEX	FATE[1]	TISSUE:	OBSERVATIONS:
0.075 mg/kg/day				
18091F	F	S	MACROSCOPIC:	
			All tissues	- Within normal limits.
			MICROSCOPIC:	
			Adrenal, cortex	- Within normal limits.
			Adrenal, medulla	- Within normal limits.
			Bone	- Within normal limits.
			Brain	- Within normal limits.
			Heart	- Within normal limits.
			Kidney	- Within normal limits.
			Liver	- Within normal limits.
			Lung	- Within normal limits.
			Ovary	- Within normal limits.
			Stomach-Glandular	- Within normal limits.
			Stomach-Nonglandular	- Within normal limits.
			Uterus	- Within normal limits.
			Uterus, cervix	- Not in plane of section.
18091M	M	S	MACROSCOPIC:	
			All tissues	- Within normal limits.
			MICROSCOPIC:	
			Adrenal, cortex	- Within normal limits.
			Adrenal, medulla	- Within normal limits.
			Bone	- Within normal limits.
			Brain	- Within normal limits.
			Epididymis	- Within normal limits.
			Heart	- Within normal limits.
			Kidney	- Within normal limits.
			Liver	- Within normal limits.
			Lung	- Within normal limits.
			Prostate	- Within normal limits.
			Seminal Vesicle	- Within normal limits.
			Stomach-Glandular	- Within normal limits.
			Stomach-Nonglandular	- Within normal limits.
			Testis	- Within normal limits.

[1]FATE CODES: S=SCHEDULED SACRIFICE E=SACRIFICED IN EXTREMIS D=DIED ON STUDY

APPENDIX J

Microscopic Tissue Inventory

Abbreviations Utilized on the
Microscopic Tissue Inventory

DOS - Deaths and Unscheduled Sacrifices
SAC - Scheduled Sacrifice
Tis. - Tissue

MICROSCOPIC TISSUE INVENTORY
0 - Termination: Rats

	(CONTROL) 0 mg/kg/day																																									0.005 mg/kg/day								
SEX:	M	M	M	M	M	M	M	M	M	M	M	F	F	F	F	F	F	F	F	F	F	F	F	F	F	F	F	F	F	F	F	F	F	F	F	F	F	F	F	F	F	M	M	M	M	M	M	M	M	M
FATE:	S	S	S	S	S	S	S	S	D	S	S	S	S	D	S	S	S	S	S	D	S	S	S	S	S	S	S	S	S	S	S	D	S	S	D	S	S	S	S	S	S	S	D	S	S	S	S	S	E	S
ANIMAL NUMBER:	1717	1718	1720	1722	1723	1724	1725	1726	1727	1730	1731	1732	1733	1734	1735	1736	1737	1738	1739	1740	1741	1742	1743	1744	1745	1746	1747	1748	1749	1750	1751	1752	1753	1754	1755	1756	1757	1758	1759	1760	1761	1763	1764	1765	1766	1768	1769	1771	1772	1773
Adrenal, cortex	X	+	X	X	X	+	+	+		+	+							+			+	+		+		+	+		+	+							+				+									
Adrenal, medulla	+	+	+	+	+	+	+	+		+	+							+			+	+		+		+	+		+	+							+				+									
Bone	+	+	+	+	+	+	+	+		+	+							+			+	+		+		+	+		+	+							+				+									
Brain	+	+	+	+	+	+	+	+		+	+							+			+	+		+		+	+		+	+							+				+									
Epididymis	+	+	+	+	+	+	+	+		+	+	0	0	0	0	0	0	0	0	0	0	0	0	0	0	0	0	0	0	0	0	0	0	0	0	0	0	0	0	0	0									
Heart	+	X	X	X	+	+	+	+		+	+							+			+	+		+		+	+		+	+							+				+									
Kidney	+	+	+	+	X	X	X	X	X	+	+			X				+			+	+		+		X	+		+	+							+				+								X	
Liver	X	X	+	X	+	X	+	X		+	X			+				+			+	+		+		+	+		+	+							+				+									
Lung	X	X	X	+	+	+	X	X		X	X							X			X	+		+		X	+		+	X							X				+									
Ovary	0	0	0	0	0	0	0	0	0	0	0							+			+	+		+		+	+		+	+							+				+	0	0	0	0	0	0	0	0	0
Prostate	+	+	+	+	+	+	+	+	X	+	+	0	0	0	0	0	0	0	0	0	0	0	0	0	0	0	0	0	0	0	0	0	0	0	0	0	0	0	0	0	0									
Seminal Vesicle	+	+	+	+	+	+	+	+	X	+	+	0	0	0	0	0	0	0	0	0	0	0	0	0	0	0	0	0	0	0	0	0	0	0	0	0	0	0	0	0	0									
Stomach-Glandular	+	+	+	+	+	+	+	+		+	+			+				+			+	+		+		+	+		+	+							+				+		+							
Stomach-Nonglandular	+	+	+	+	+	+	+	+		+	+							+			+	+		+		+	+		+	+							+				+									
Testis	+	+	+	+	+	+	+	+		+	+	0	0	0	0	0	0	0	0	0	0	0	0	0	0	0	0	0	0	0	0	0	0	0	0	0	0	0	0	0	0									
Uterus	0	0	0	0	0	0	0	0	0	0	0							+			+	+		+		X	X		X	X							X				X	0	0	0	0	0	0	0	0	0
Uterus, cervix	0	0	0	0	0	0	0	0	0	0	0							+			+	+		+		+	+		+	+							+				+	0	0	0	0	0	0	0	0	0
ALL TISSUES												X	X		X	X	X		X	X			X		X			X			X		X	X	X	X		X	X	X		X		X	X	X	X	X		X
Esophagus																																											X							
Soft Tis., Abdomen		X																																																
Soft Tis., Thorax																																X											X							
Thymus														X																																				

401-189FO Fates: D - Found dead E - Sacrificed in extremis S - Scheduled sacrifice

Codes: X - Microscopic observation or annotation
+ - Tissue present and within normal limits
0 - Tissue not appropriate for this sex
B - See IADR report
- - Tissue not examined
N - Tissue not in plane of section
A - Tissue is too autolyzed for diagnosis

For blanks above the dashed line, see explanatory notes for MICROSCOPIC TISSUE INVENTORY. Tissues listed below the dashed line were examined due to the presence of a macroscopic change or appearance in the plane of section.

MICROSCOPIC TISSUE INVENTORY
0 - Termination: Rats

	(CONTROL) 0 mg/kg/day										
SEX:	M	M	M	M	M	M	M	M	M	M	M
FATE:	S	S	S	S	S	S	S	S	D	S	S
ANIMAL NUMBER:	1917	1918	1920	1922	1923	1924	1925	1926	1927	1930	1931
Trachea											
Urinary Bladder									X		

SEX:	F	F	F	F	F	F	F	F	F	F	F	F	F	F	F
FATE:	S	S	D	S	S	S	S	S	D	S	S	S	S	S	S
ANIMAL NUMBER:	1932	1933	1934	1935	1936	1937	1938	1939	1940	1941	1942	1943	1944	1945	1946
Trachea															
Urinary Bladder															

SEX:	F	F	F	F	F	F	F	F	F	F	F	F	F	F	F
FATE:	S	S	S	S	S	S	D	S	S	D	S	S	S	S	S
ANIMAL NUMBER:	1947	1948	1949	1950	1951	1952	1953	1954	1955	1956	1957	1958	1959	1960	1961
Trachea						X									
Urinary Bladder															

	0.005 mg/kg/day								
SEX:	M	M	M	M	M	M	M	M	M
FATE:	S	D	S	S	S	S	S	E	S
ANIMAL NUMBER:	1963	1964	1965	1966	1968	1969	1971	1972	1973
Trachea									
Urinary Bladder									

401-189FO Fates: D - Found dead E - Sacrificed in extremis S - Scheduled sacrifice

Codes: X - Microscopic observation or annotation
+ - Tissue present and within normal limits
O - Tissue not appropriate for this sex
B - See IADR report
- - Tissue not examined
N - Tissue not in plane of section
A - Tissue is too autolyzed for diagnosis

For blanks above the dashed line, see explanatory notes for MICROSCOPIC TISSUE INVENTORY. Tissues listed below the dashed line were examined due to the presence of a macroscopic change or appearance in the plane of section.

MICROSCOPIC TISSUE INVENTORY
0 - Termination: Rats

	0.005 mg/kg/day																																						0.015 mg/kg/day								
SEX:	M	M	M	F	F	F	F	F	F	F	F	F	F	F	F	F	F	F	F	F	F	F	F	F	F	F	F	F	F	F	F	F	F	F	F	F	F	M	M	M	M	M	M	M	M	M	M
FATE:	S	S	S	S	S	S	S	S	S	D	S	S	S	S	S	S	S	S	S	S	S	S	S	S	S	S	S	S	S	S	S	S	S	S	S	S	S	S	S	S	S	S	S	S	S	S	S	S
ANIMAL NUMBER:	1	1	1	1	1	1	1	1	1	1	1	1	1	1	1	1	1	1	1	1	1	1	1	1	1	1	1	1	1	1	1	1	1	1	1	1	1	1	1	1	1	1	1	1	1	1	1	1
	7	7	7	7	7	7	7	7	7	7	7	7	7	7	7	7	7	7	7	7	7	7	7	7	7	7	7	7	7	7	7	7	7	7	7	7	7	8	8	8	8	8	8	8	8	8	8	8
	9	9	9	9	9	9	9	9	9	9	9	9	9	9	9	9	9	9	9	9	9	9	9	9	9	9	9	9	9	9	9	9	9	9	9	9	9	0	0	0	0	0	0	0	0	0	0	0
	7	7	7	7	7	8	8	8	8	8	8	8	8	8	8	9	9	9	9	9	9	9	9	9	9	0	0	0	0	0	0	0	0	0	0	0	0	0	0	1	1	1	1	1	1	2	2	2
	4	5	6	7	8	9	0	1	2	3	4	5	6	7	8	9	0	1	2	3	4	5	6	7	8	9	0	1	2	3	4	5	6	7	8	9	0	1	2	3	4	5	6	7	8	0	1	2
Lung																					X																											
ALL TISSUES	X	X	X	X	X	X	X	X	X	X	X	X	X	X	X	X	X	X	X	X	X	X	X	X	X	X	X	X	X	X	X	X	X	X	X	X	X	X	X	X	X	X	X	X	X	X	X	X

401-189FO Fates: D - Found dead E - Sacrificed in extremis S - Scheduled sacrifice

Codes: X - Microscopic observation or annotation - - Tissue not examined
+ - Tissue present and within normal limits N - Tissue not in plane of section
O - Tissue not appropriate for this sex A - Tissue is too autolyzed for diagnosis
B - See IADR report

For blanks above the dashed line, see explanatory notes for MICROSCOPIC TISSUE INVENTORY. Tissues listed below the dashed line were examined due to the presence of a macroscopic change or appearance in the plane of section.

MICROSCOPIC TISSUE INVENTORY
0 - Termination: Rats

0.015 mg/kg/day

ANIMAL NUMBER:	1822	1823	1824	1825	1826	1827	1828	1829	1830	1831	1832	1833	1834	1835	1836	1837	1838	1839	1840	1841	1842	1843	1844	1845	1846	1847	1848	1849	1850	1851
SEX:	F	F	F	F	F	F	F	F	F	F	F	F	F	F	F	F	F	F	F	F	F	F	F	F	F	F	F	F	F	F
FATE:	S	S	S	S	S	S	S	S	S	S	S	S	S	S	S	S	S	S	S	S	S	S	S	S	S	S	S	D	S	S
Adrenal, cortex																														
Adrenal, medulla																														
Bone																														
Brain																														
Epididymis	0	0	0	0	0	0	0	0	0	0	0	0	0	0	0	0	0	0	0	0	0	0	0	0	0	0	0	0	0	0
Heart																														
Kidney																														
Liver																														
Lung																														
Ovary																														
Prostate	0	0	0	0	0	0	0	0	0	0	0	0	0	0	0	0	0	0	0	0	0	0	0	0	0	0	0	0	0	0
Seminal Vesicle	0	0	0	0	0	0	0	0	0	0	0	0	0	0	0	0	0	0	0	0	0	0	0	0	0	0	0	0	0	0
Stomach-Glandular																														
Stomach-Nonglandular																												X		
Testis	0	0	0	0	0	0	0	0	0	0	0	0	0	0	0	0	0	0	0	0	0	0	0	0	0	0	0	0	0	0
Uterus																														
Uterus, cervix																														
ALL TISSUES	X	X	X	X	X	X	X	X	X	X	X	X	X	X	X	X	X	X	X	X	X	X	X	X	X	X	X		X	X
Duodenum																												X		

0.075 mg/kg/day

ANIMAL NUMBER:	1852	1853	1856	1857	1860	1861	1862	1863	1864	1865
SEX:	M	M	M	M	M	M	M	M	M	M
FATE:	S	S	S	S	S	S	S	S	S	S
Adrenal, cortex	N	+	+	+	+	+	+	+	+	+
Adrenal, medulla	N	+	+	+	+	+	+	+	+	+
Bone	+	+	+	+	+	+	X	+	+	+
Brain	+	+	+	+	+	+	+	+	+	+
Epididymis	+	+	+	+	+	+	+	+	+	+
Heart	X	X	X	+	+	+	+	X	+	+
Kidney	+	+	+	+	+	+	X	+	X	+
Liver	X	X	X	+	X	X	+	X	X	+
Lung	+	X	+	X	+	+	X	X	+	+
Ovary	0	0	0	0	0	0	0	0	0	0
Prostate	+	+	+	+	+	+	+	+	+	+
Seminal Vesicle	+	+	+	+	+	+	+	+	+	+
Stomach-Glandular	+	+	+	+	+	+	+	+	+	+
Stomach-Nonglandular	+	+	+	+	+	+	+	+	+	+
Testis	+	+	+	+	+	+	+	+	+	+
Uterus	0	0	0	0	0	0	0	0	0	0
Uterus, cervix	0	0	0	0	0	0	0	0	0	0
ALL TISSUES										
Duodenum										

ANIMAL NUMBER:	1867	1868	1869	1870	1871	1872	1873	1874	1875	1876	1877
SEX:	F	F	F	F	F	F	F	F	F	F	F
FATE:	D	S	S	S	D	S	D	D	S	D	D
Adrenal, cortex				+		+			+		
Adrenal, medulla				+		+			+		
Bone				+		+			+		
Brain				+		+			+		
Epididymis	0	0	0	0	0	0	0	0	0	0	0
Heart				+		+			+		
Kidney				+		X			+		
Liver				X		+			+		
Lung	X			X		X		+	+		
Ovary				+		+			+		
Prostate	0	0	0	0	0	0	0	0	0	0	0
Seminal Vesicle	0	0	0	0	0	0	0	0	0	0	0
Stomach-Glandular				+		+			+		
Stomach-Nonglandular				+		+			+		
Testis	0	0	0	0	0	0	0	0	0	0	0
Uterus				X		X			X		
Uterus, cervix				+		+			+		
ALL TISSUES		X	X		X		X			X	X
Duodenum											

401-189F0 Fates: D - Found dead E - Sacrificed in extremis S - Scheduled sacrifice

Codes: X - Microscopic observation or annotation
+ - Tissue present and within normal limits
0 - Tissue not appropriate for this sex
B - See IADR report
- - Tissue not examined
N - Tissue not in plane of section
A - Tissue is too autolyzed for diagnosis

For blanks above the dashed line, see explanatory notes for MICROSCOPIC TISSUE INVENTORY. Tissues listed below the dashed line were examined due to the presence of a macroscopic change or appearance in the plane of section.

280

MICROSCOPIC TISSUE INVENTORY
0 - Termination: Rats

0.075 mg/kg/day

SEX:	F	F	F	F	F	F	F	F	F	F	F	F	F	F	F	F	F	F	F	F
FATE:	S	D	D	D	D	S	D	S	S	D	S	S	D	S	S	D	D	D	S	
ANIMAL NUMBER:	1	1	1	1	1	1	1	1	1	1	1	1	1	1	1	1	1	1	1	1
	8	8	8	8	8	8	8	8	8	8	8	8	8	8	8	8	8	8	8	8
	0	0	0	0	0	0	0	0	0	0	0	0	0	0	0	0	0	0	0	0
	7	7	8	8	8	8	8	8	8	8	8	8	8	9	9	9	9	9	9	9
	8	9	0	1	2	3	4	5	6	7	8	9	0	1	2	3	4	5	6	
Adrenal, cortex	+					+		+		+	+			+	+				+	
Adrenal, medulla	+					+		+		+	+			+	+				+	
Bone	+					+		+		+	+			+	+				+	
Brain	+					+		+		+	+			+	+				+	
Heart	+	X				+		+		+	+			+	+				+	
Kidney	X	+				X		+		X				+	X		X		X	
Liver	+					+		+		X				+	+				+	
Lung	X	X		X		+		+		X				X	X				X	
Ovary	+					+		+		+				+	+				+	
Stomach-Glandular	+	X				+		+		+				+	+		X		+	
Stomach-Nonglandular	+					+		+		+				+	+				+	
Uterus	X					X		X		X		X	+	X	X		X		X	
Uterus, cervix	+					+		X		+				+	+				+	
ALL TISSUES			X		X		X	X		X		X				X		X		
Skin	+																			

401-189FO Fates: D - Found dead E - Sacrificed in extremis S - Scheduled sacrifice

Codes: X - Microscopic observation or annotation
+ - Tissue present and within normal limits
0 - Tissue not appropriate for this sex
B - See IADR report
- - Tissue not examined
N - Tissue not in plane of section
A - Tissue is too autolyzed for diagnosis

For blanks above the dashed line, see explanatory notes for MICROSCOPIC TISSUE INVENTORY. Tissues listed below the dashed line were examined due to the presence of a macroscopic change or appearance in the plane of section.

288

MICROSCOPIC TISSUE INVENTORY
0 - Termination: Rats

	(CONTROL) 0 mg/kg/day																				0.005 mg/kg/day																			
SEX:	M	M	M	M	M	M	M	M	M	M	M	F	F	F	F	F	F	F	F	F	M	M	M	M	M	M	M	M	M	M	F	F	F	F	F	F	F	F	F	F
FATE:	S	S	S	S	S	S	S	S	S	S	S	S	S	S	S	S	S	S	S	S	S	S	S	S	S	S	S	S	S	S	S	S	S	S	S	S	S	S	S	S
ANIMAL NUMBER:	1	1	1	1	1	1	1	1	1	1	1	1	1	1	1	1	1	1	1	1	1	1	1	1	1	1	1	1	1	1	1	1	1	1	1	1	1	1	1	1
	7	7	7	7	7	7	7	7	7	7	7	7	7	7	7	7	7	7	7	7	7	7	7	7	7	7	7	7	7	8	7	7	7	7	7	8	8	8	8	8
	9	9	9	9	9	9	9	9	9	9	9	9	9	9	9	9	9	9	9	9	9	9	9	9	9	9	9	9	9	0	9	9	9	9	9	0	0	0	0	0
	3	3	3	3	4	4	4	4	5	5		3	3	3	3	4	4	5	5	6	7	8	8	8	9	9	9	9	0		8	9	9	9	9	0	0	0	0		
	3	6	7	9	1	2	3	8	0	9		2	5	6	8	2	9	3	4	1	8	5	6	7	8	0	1	2	5	0	0	1	4	6	7	8	1	2	4	6	
	M	M	M	M	M	M	M	M	M	M		F	F	F	F	F	F	F	F	F	M	M	M	M	M	M	M	M	M	M	F	F	F	F	F	F	F	F	F	
Adrenal, cortex	+	+	+	+	+	+	+	+	+	+		+	+	+	+	+	+	+	+	+																					
Adrenal, medulla	+	+	+	+	+	+	+	+	+	+		+	+	+	+	+	+	+	+	+																					
Bone	+	+	+	+	+	+	+	+	+	+		+	+	+	+	+	+	+	+	+																					
Brain	+	+	+	+	+	+	+	+	+	+		+	+	+	+	+	+	+	+	+																					
Epididymis	+	+	+	+	+	+	+	+	+	+		0	0	0	0	0	0	0	0	0																					
Heart	+	+	+	+	+	+	+	+	+	+		+	+	+	+	+	+	+	+	+																					
Kidney	+	+	+	+	+	+	+	+	+	X		X	+	+	+	+	+	+	+	+																					
Liver	+	+	+	+	+	+	+	+	+	+		+	+	+	+	X	+	+	+	+																					
Lung	+	+	+	+	+	+	+	+	+	+		+	+	+	+	+	+	+	+	+																					
Ovary	0	0	0	0	0	0	0	0	0	0		+	+	+	+	+	N	+	+	+	0	0	0	0	0	0	0	0	0	0											
Prostate	+	+	+	+	+	+	+	+	+	+		0	0	0	0	0	0	0	0	0																					
Seminal Vesicle	+	+	+	+	+	+	+	+	+	+		0	0	0	0	0	0	0	0	0																					
Stomach-Glandular	+	+	+	+	+	+	+	+	+	+		+	+	+	+	+	+	+	+	+																					
Stomach-Nonglandular	+	+	+	+	+	+	+	+	+	+		+	+	+	+	+	+	+	+	+																					
Testis	+	+	+	+	+	+	+	+	+	+		0	0	0	0	0	0	0	0	0																					
Uterus	0	0	0	0	0	0	0	0	0	0		+	+	+	+	+	+	+	+	+	0	0	0	0	0	0	0	0	0	0											
Uterus, cervix	0	0	0	0	0	0	0	0	0	0		+	+	+	+	+	+	+	+	+	0	0	0	0	0	0	0	0	0	0											
ALL TISSUES																					X	X	X	X	X	X	X	X	X	X	X	X	X	X	X	X	X	X	X	X	X

401-189F1B Fates: D - Found dead E - Sacrificed in extremis S - Scheduled sacrifice

Codes: X - Microscopic observation or annotation
+ - Tissue present and within normal limits
0 - Tissue not appropriate for this sex
B - See IADR report
- - Tissue not examined
N - Tissue not in plane of section
A - Tissue is too autolyzed for diagnosis

For blanks above the dashed line, see explanatory notes for MICROSCOPIC TISSUE INVENTORY. Tissues listed below the dashed line were examined due to the presence of a macroscopic change or appearance in the plane of section.

MICROSCOPIC TISSUE INVENTORY
0 - Termination: Rats

	0.015 mg/kg/day																				0.075 mg/kg/day																			
SEX:	M	M	M	M	M	M	M	M	M	M	M	F	F	F	F	F	F	F	F	F	M	M	M	M	M	M	M	M	M	M	F	F	F	F	F	F	F	F	F	F
FATE:	S	S	S	S	S	S	S	S	S	S	S	S	S	S	S	S	S	S	S	S	S	S	S	S	S	S	S	S	S	S	S	S	S	S	S	S	S	S	S	S
ANIMAL NUMBER:	1	1	1	1	1	1	1	1	1	1	1	1	1	1	1	1	1	1	1	1	1	1	1	1	1	1	1	1	1	1	1	1	1	1	1	1	1	1	1	1
	8	8	8	8	8	8	8	8	8	8	8	8	8	8	8	8	8	8	8	8	8	8	8	8	8	8	8	8	8	8	8	8	8	8	8	8	8	8	8	8
	0	0	0	0	0	0	0	0	0	0	0	0	0	0	0	0	0	0	0	0	0	0	0	0	0	0	0	0	0	0	0	0	0	0	0	0	0	0	0	0
	2	2	2	2	3	3	3	3	4	4		2	3	3	3	4	4	4	4	4	5		7	7	7	8	8	9	8	8	9	9		6	7	7	7	8	8	8	9	5	5
	2	3	4	7	1	4	5	8	5	6		8	2	6	7	0	2	4	7	8	0		0	2	5	3	5	1	M	M	M	M		9	0	2	8	3	5	9	1	F	F
	M	M	M	M	M	M	M	M	M	M		F	F	F	F	F	F	F	F	F	F		M	M	M	M	M	M	1	2	1	2		F	F	F	F	F	F	F	F	1	2
Adrenal, cortex																							+	+	+	+	+	+	+	+	+	+		+	+	+	+	+	+	+	+	+	+
Adrenal, medulla																							+	+	+	+	+	+	+	+	+	+		+	+	+	+	+	+	+	+	+	+
Bone																							+	+	+	+	+	+	+	+	+	+		+	+	+	+	+	+	+	+	+	+
Brain																							+	+	+	+	+	+	+	+	+	+		+	+	+	+	+	+	+	+	+	+
Epididymis												0	0	0	0	0	0	0	0	0	0		+	+	+	+	+	+	+	+	+	+		0	0	0	0	0	0	0	0	0	0
Heart																							+	+	+	+	+	+	+	+	+	+		+	+	+	+	+	+	+	+	+	+
Kidney																							+	+	+	+	+	+	+	+	+	+		+	+	+	+	+	+	+	+	+	+
Liver																							+	+	+	+	+	+	+	+	+	+		+	+	+	+	+	+	+	+	+	+
Lung																							+	+	+	+	+	+	+	+	+	+		+	+	+	+	+	+	+	+	+	+
Ovary	0	0	0	0	0	0	0	0	0	0	0												0	0	0	0	0	0	0	0	0	0		+	+	+	+	+	+	+	+	+	+
Prostate												0	0	0	0	0	0	0	0	0	0		+	+	N	+	+	+	+	+	+	+		0	0	0	0	0	0	0	0	0	0
Seminal Vesicle												0	0	0	0	0	0	0	0	0	0		+	+	N	+	+	+	+	+	+	+		0	0	0	0	0	0	0	0	0	0
Stomach-Glandular																							+	+	+	+	+	+	+	+	+	+		+	+	+	+	+	+	+	+	+	+
Stomach-Nonglandular																							+	+	+	+	+	+	+	+	+	+		+	+	+	+	+	+	+	+	+	+
Testis												0	0	0	0	0	0	0	0	0	0		+	+	+	+	+	+	+	+	+	+		0	0	0	0	0	0	0	0	0	0
Uterus	0	0	0	0	0	0	0	0	0	0	0												0	0	0	0	0	0	0	0	0	0		+	+	+	+	+	+	+	+	+	+
Uterus, cervix	0	0	0	0	0	0	0	0	0	0	0												0	0	0	0	0	0	0	0	0	0		+	+	+	+	+	+	+	N	+	+
ALL TISSUES	X	X	X	X	X	X	X	X	X	X	X	X	X	X	X	X	X	X	X	X	X																					

401-189F1B Fates: D - Found dead E - Sacrificed in extremis S - Scheduled sacrifice

Codes: X - Microscopic observation or annotation
+ - Tissue present and within normal limits
0 - Tissue not appropriate for this sex
B - See IADR report
- - Tissue not examined
N - Tissue not in plane of section
A - Tissue is too autolyzed for diagnosis

For blanks above the dashed line, see explanatory notes for MICROSCOPIC TISSUE INVENTORY. Tissues listed below the dashed line were examined due to the presence of a macroscopic change or appearance in the plane of section.

INTERNATIONAL RESEARCH AND DEVELOPMENT CORPORATION

PROTOCOL REVISION OR CLARIFICATION

Protocol Sheet No. 5 Study No. 401-189 (IR-82-215)

TITLE: ONE GENERATION REPRODUCTION STUDY IN RATS WITH ELEMENTAL PHOSPHORUS

ITEM	JUSTIFICATION
1	Personnel changes due to the resignation of Mr. Barry W. Benson.

ITEM	PROTOCOL REVISION OR CLARIFICATION
1	Director of Quality Assurance: Patrick E. Traster, B.S. Manager of Test Material Control: Mark W. Griggs, B.S. Manager of Animal Services: James R. Casey, B.S.

Study Director James L. Schardein, M.S.

Signature 8/27/84 Date

IR90-49-5

INTERNATIONAL RESEARCH AND DEVELOPMENT CORPORATION

PROTOCOL REVISION OR CLARIFICATION

Protocol Sheet No. 4 Study No. 401-189 (IR-82-215)

TITLE: ONE GENERATION REPRODUCTION STUDY IN RATS WITH ELEMENTAL PHOSPHORUS

ITEM	JUSTIFICATION
1	Documentation of a protocol deviation resulting in the incorrect number of F_{1a} pups necropsied at weaning.

ITEM	PROTOCOL REVISION OR CLARIFICATION
1	At weaning, 5 male and 5 female F_{1a} pups were necropsied instead of the protocol-designated number of 10/sex/group.

Study Director James L. Schardein, M.S.

James L. Schardein 6/ 2/83

Signature Date

IR90-49-5

3816

INTERNATIONAL RESEARCH AND DEVELOPMENT CORPORATION

PROTOCOL REVISION OR CLARIFICATION

Protocol Sheet No. 3 Study No. 401-189 (IR-82-215)

TITLE: ONE GENERATION REPRODUCTION STUDY IN RATS WITH ELEMENTAL PHOSPHORUS

ITEM	JUSTIFICATION
1	Designation of F_1 pups to be examined histopathologically.

ITEM	PROTOCOL REVISION OR CLARIFICATION
1	The protocol designated tissues and organs of the F_{1b} pups preserved at necropsy will be examined microscopically for the high dose and control groups. The tissues and organs of the F_{1a} pups will not be examined.

Study Director James L. Schardein, M.S.

Signature 5/26/83
Date

IR90-49-5

INTERNATIONAL RESEARCH AND DEVELOPMENT CORPORATION

PROTOCOL REVISION OR CLARIFICATION

Protocol Sheet No. 2 Study No. 401-189 (IR-82-215)

TITLE: ONE GENERATION REPRODUCTION STUDY IN RATS WITH ELEMENTAL PHOSPHORUS

ITEM	JUSTIFICATION
1	Due to the reduced fertility observed in all groups, the study will be extended for production of a second litter (F_{1b}) by the F_0 parents.
2	Mating, gestation and lactation procedures for production of F_{1b} litters.
3	Revised study termination procedures.
4	Revision of histopathology evaluation of pups.
5	Study schedule revision.

ITEM	PROTOCOL REVISION OR CLARIFICATION
1	All F_0 males and females will remain on study and continue on treatment after the F_1 pups (hereafter described as F_{1a} pups) are weaned for production of a second litter (F_{1b}).
2	Ten days after completion of the F_{1a} weaning period, the F_0 females will be bred a second time to produce the F_{1b} litters. Each mating will be with a different male within the same treatment group. All observations and measurements previously described for the F_0 parents and F_{1a} pups will subsequently be made during gestation and lactation of the F_{1b} litters.

Study Director James L. Schardein, M.S.

James L. Schardein 2/25/83

Signature Date

IR90-49-5

INTERNATIONAL RESEARCH AND DEVELOPMENT CORPORATION

PROTOCOL REVISION OR CLARIFICATION

Protocol Sheet No. 2 Study No. 401-189 (IR-82-215)

TITLE: ONE GENERATION REPRODUCTION STUDY IN RATS WITH ELEMENTAL PHOSPHORUS

ITEM	PROTOCOL REVISION OR CLARIFICATION
3	At weaning, all F_0 dams and 10 male and 10 female F_{1b} pups randomly selected from each group will be sacrificed and necropsied at weaning. At the completion of the F_{1b} weaning period, 10 randomly selected F_0 males from each group and F_0 females not delivering litters will be sacrificed and necropsied. Specific evaluations at necropsy will be conducted as directed in Section XVI.D. of the protocol. Tissues will be preserved from the above F_0 (10/sex/group) animals and evaluated as described in Section XVI.E.2. of the protocol. Tissues will also be preserved from the F_{1b} pups (10/sex/group) for possible histopathology.
4	The tissues and organs of the F_{1a} (previously designated as F_1) and F_{1b} pups preserved at necropsy will not be examined histopathologically at this time. The Sponsor will make a decision at a later date which of the two litters will be evaluated.
5	Proposed Completion Date of Study: May 17, 1983

Study Director James L. Schardein, M.S.

James L Schardein 2/25/83

Signature Date

INTERNATIONAL RESEARCH AND DEVELOPMENT CORPORATION

PROTOCOL REVISION OR CLARIFICATION

Protocol Sheet No. 1 Study No. 401-189 (IR-82-215)

TITLE: ONE GENERATION REPRODUCTION STUDY IN RATS WITH ELEMENTAL PHOSPHORUS

ITEM	JUSTIFICATION
1	Establish study number.
2	Determine study schedule.
3	Establish dose levels as set by Sponsor.
4	Identification of test article.
5	Study initiation.

ITEM	PROTOCOL REVISION OR CLARIFICATION
1	IRDC Study No. 401-189 (IR-82-215).
2	Proposed Starting Date of Study: October 19, 1982 Proposed Completion Date of Study: March 4, 1983 Proposed Date of Final Report: September 9, 1983
3	XV.D.

Group Number	Number of Parental Animals Males	Females	Dosage Level (mg/kg/day)
1	15	30	0
2	15	30	0.005
3	15	30	0.015
4	15	30	0.075

Study Director James L. Schardein, M.S.

Signature 9/28/82 Date

IR90-49-5

2900

INTERNATIONAL RESEARCH AND DEVELOPMENT CORPORATION

PROTOCOL REVISION OR CLARIFICATION

Protocol Sheet No. 1 Study No. 401-189 (IR-82-215)

TITLE: ONE GENERATION REPRODUCTION STUDY IN RATS WITH ELEMENTAL PHOSPHORUS

ITEM	PROTOCOL REVISION OR CLARIFICATION
4	IRDC No. 7481B.
5	Initiate study in accordance with attached protocol.

Study Director James L. Schardein, M.S.

Signature 9/28/82 Date

I. STUDY TITLE

One Generation Reproduction Study in Rats with Elemental Phosphorus

II. PURPOSE OF THE STUDY

The objective of this study is to determine the effect of the test article on fertility, parturition, neonatal viability, growth of the newborn and reproductive performance in rats. The study design utilizes treatment of both sexes.

III. STUDY NUMBER

IV. TESTING FACILITY

International Research and Development Corporation
Mattawan, Michigan 49071

V. SPONSOR

Monsanto Chemical Company
800 North Lindbergh Boulevard
St. Louis, Missouri 63166

VI. SPONSOR'S REPRESENTATIVE

Dr. Rashmi Nair

VII. IRDC PERSONNEL RESPONSIBILITIES

Study Director:	James L. Schardein, M.S. Director of Reproduction and Teratology
Director of Toxicology Division:	Malcolm Blair, Ph.D.
Associate Director of Toxicology Division:	Dale E. Johnson, Pharm.D., Ph.D.
Director of Quality Assurance:	Barry W. Benson, B.S.
Director of Laboratory Services:	Patrick E. Traster, B.S.
Director of Statistics & Computer:	Robert E. Vollmar, M.S.
Director of Pathology Division:	Ward R. Richter, D.V.M., M.S., A.C.V.P.

VIII. SCHEDULE

Proposed Starting Date of Study:	September, 1982
Proposed Completion Date of Study:	February, 1983
Proposed Date of Final Report:	

IX. TEST ARTICLE DATA (To be supplied by Sponsor)

A. Identification: Phosphorus (yellow); IRDC 7481B

B. Lot Number: Fisher 701628

C. Batch Number:

D. Physico-Chemical Properties:

E. Purity:

F. Shelf Life:

G. Storage Conditions: Phosphorus is shipped and stored in accordance with DOT regulations (see attached information).

H. Safety Precautions: Phosphorus is a flammable solid and is considered hazardous.

X. TEST ARTICLE PREPARATION

A. Dosage Concentrations

Based on data supplied by the Sponsor a stock solution will be prepared for dilution to deliver the stated dosages. Preparation of the solution and the analytical method for determination of phosphorus in prepared test solutions is outlined in Appendix I.

Stock and dosing solutions will each be prepared in separate batches as required since the stability of phosphorus in corn oil has been established as at least 17 days by the Sponsor. The prepared test solutions will be stirred overnight using a magnetic stir plate and bars and analyzed 24 hours after preparation to allow for complete dissolution of the phosphorus. Prior to administration to the test animals, samples from each level and batch will be analyzed in duplicate. Assay values which deviate from normal expected ranges (Table 3, Appendix I) will be considered out of tolerance and will not be administered to the animals. A replacement solution will be prepared immediately and analyzed.

B. Dosage Preparation

The test article will be given in corn oil at a constant volume of 5 ml/kg. The control group will be given corn oil only at a volume of 5 ml/kg.

XI. TEST ANIMALS

A. Species: Rat

B. Strain: Charles River COBS® CD®

C. Source: The Charles River Breeding Laboratories, Inc.
9801 Shaver Road
Portage, Michigan 49081

D. Age at Start of Study: Approximately 6-7 weeks of age at receipt; 56 days of age at initiation of dosing.

E. Body Weight at Start of Study: Males: approximately 225-250 g
Females: approximately 175-200 g

F. Method of Identification: Each parental rat will be identified by cage, group and individually by a monel metal ear tag bearing its animal number. The individual animal number plus the IRDC project number will comprise a unique identification number for each animal.

G. Number on Study: 60 males and 120 females

H. Reason for Selection: The rat is an acceptable model for reproduction studies. This laboratory has historical control data on the fertility, neonatal survival indices and growth rates and the reproductive performance in rats of this strain from this source.

XII. STUDY DURATION

The duration of the entire study from initiation of treatment in the males through lactation of the pups is approximately 4½ months. A study schedule will be issued prior to study initiation that will include the following information: dates for animal arrival, mating initiation and termination, administration of the test and control articles (initiation and termination), parturition, lactation and sacrifice.

XIII. ROUTE OF ADMINISTRATION

Oral.

Reason for Use: One of the potential routes of exposure to humans is oral.

XIV. METHOD AND FREQUENCY OF ADMINISTRATION OF THE TEST ARTICLE

Gavage. Animals will receive the test article by gavage as a single daily dose. It will be administered in corn oil at a constant volume of 5.0 ml/kg/day. Administration of both the test and control articles (corn oil) to both sexes will begin 80 days prior to mating. In males dosing will continue until sacrifice. Administration in the females will continue through gestation and weaning of the pups. Individual dosages will be based on the most recent weekly body weights.

XV. EXPERIMENTAL DESIGN

A. Animal Conditioning and Selection

Approximately 150 female and 75 male Charles River COBS® CD® rats will be removed randomly from the shipping cartons and housed for a minimum 10 day acclimation period. During this conditioning period, the rats will be observed daily for any clinical signs of disease and all animals will be given a detailed physical examination just prior to study initiation. All rats with any evidence of disease or poor physical condition will be discarded. Animals considered suitable for study will be randomly selected and divided into the groups indicated using the procedure described in Section XV.C.

B. Housing

All animals will be housed in an environmentally controlled room with an average temperature of 23 $\pm$ 2°C and average humidity of 50 $\pm$ 15 percent. Fluorescent lighting will provide illumination 12 hours per day. During the study, rats will be housed individually in suspended wire-mesh cages except during mating, gestation and lactation. On gestation day 0, the females will be housed in plastic cages with wood shaving bedding until sacrifice.

C. Randomization (Procedure A)

Animal numbers and corresponding body weights are entered onto magnetic tape which is used as the data source for the randomization procedure. The mean body weight and standard deviation are calculated by sex and a computer-generated edit develops a listing of those animals whose body weights are within $\pm$ 1.5 standard deviations of the mean. From the qualifying animals, the randomization procedure selects and assigns the required number of animals. Bartlett's Chi-square test for homogeneity of variances is applied to the groups. If the groups are not judged to be homogeneous, new randomizations are applied until homogeneity is established.

XV. EXPERIMENTAL DESIGN (continued)

D. Dosage Levels

Group Number	Number of Parental Animals		Dosage Level (mg/kg/day)
	Males	Females	
1	15	30	0 (Vehicle Control)
2	15	30	Low Dose
3	15	30	Mid Dose
4	15	30	High Dose

E. Basal Laboratory Diet

1. Basal Diet: Certified Rodent Chow® #5002, Ralston Purina Company. Diet will be available ad libitum to all animals.

2. Identification: Each lot utilized will be identified and recorded.

3. Contaminant Levels: The diet used will be a certified diet with specified analyses for contaminants performed by the supplier.

F. Drinking Water

The drinking water used for test animals at IRDC will be monitored for contaminants at periodic intervals according to IRDC Standard Operating Procedures. Water will be available ad libitum for all animals.

XVI. OBSERVATIONS AND EXAMINATIONS

A. Parental Observations

1. Signs: All parental animals will be observed for mortality and signs of overt toxicity twice each day (morning and afternoon), seven days a week. Should mortality or such signs of overt toxicity be observed, these will be recorded on the day observed. Examples of overt toxicity include tremors, convulsions, loss of righting reflex, excessive blood loss and moribundity. An exception to this would be a recurring, frequently observed reaction for which a general statement will suffice. During treatment, a detailed clinical observation of each animal will be performed weekly and the findings recorded.

XVI. OBSERVATIONS AND EXAMINATIONS (continued)

2. Body Weights: Males and females will be weighed weekly during treatment until sacrifice. Females will also be weighed on gestation days 0, 7, 13 and 20 and on days 0, 7, 14 and 21 of lactation.

3. Food Consumption: Individual food consumption will be measured for all parental animals weekly except during the mating period when the animals will be cohabitating.

4. Mortality: Any rat showing signs of severe debility or toxicity, particularly if death appears imminent, will be killed to prevent loss of tissues through autolysis. All rats killed in extremis or found dead will be subjected to a routine necropsy procedure. The disposition of all animals and intact fetuses or pups is described in Section XVI.E.

5. Estrous Cycle Determinations: Ten days prior to mating and until evidence of copulation is observed or the mating period has ended, the females will be smeared daily to establish estrous cycles.

B. Breeding Procedures

Sexually mature male and female rats will be acclimated in this laboratory for a minimum of 10 days prior to study initiation. All rats will be randomly assigned by a computer-generated program to three treatment groups and one control group of 15 males and 30 females each and properly identified by ear tag.

After 80 days of exposure to the F_0 animals one male will be housed with two females of the same treatment group in a plastic cage with wood shaving bedding for mating. The occurrence of copulation will be established by daily inspection for a copulatory plug or vaginal smear for sperm. A positive finding is considered day "0" of gestation. Each female is then returned to an individual plastic cage. The maximum mating period will be 15 days. If no evidence of copulation is obtained in 10 days, the female will be placed with another male (sperm positive in the initial 10 days) in the same treatment group for the remaining 5 days. After the 15-day mating period the males will be returned to suspended wire-mesh cages until sacrifice. At this time, females with no evidence of mating will be housed individually and provided nesting material.

XVI. OBSERVATIONS AND EXAMINATIONS (continued)

C. Delivery

All females from each group will be allowed to deliver. Toward the end of the gestation period, females will be examined twice daily for signs of parturition. The bred females will be allowed to give birth (F_1). The duration of gestation will be calculated and any difficulties occurring at parturition will be recorded. The day on which all pups have been delivered will be defined as day 0 of lactation. The litters will be examined as soon as possible after delivery for litter size, stillborns, live births and any gross anomalies. Litter size will be reduced to 10 pups, of equal sex distribution whenever possible, on lactation day 4. The culled pups will be examined externally and discarded. Litters will be caged with their mothers for 3 weeks after birth. The dams and pups will be observed daily for survival, behavioral abnormalities in nesting and nursing and presence of dead pups will be recorded.

Any intact dead pups found will be necropsied, examined for anomalies and discarded. The heart will be dissected by a modification of the method described by Staples[1]. Pups will be weighed individually on days 0, 4, 7, 14 and 21 of lactation. The number of pups per sex will be recorded on day 21 of lactation.

D. Termination of the Study

Unless otherwise specified by the Sponsor prior to this time, all dams and 10 male/10 female F_1 pups randomly selected from each group will be sacrificed and necropsied at weaning. Uterine implantation sites of the dams will be recorded. If abnormalities are noted in any pup at weaning, these pups will also be necropsied. All other pups will be examined externally, sacrificed and discarded.

At the completion of the weaning period, 10 randomly selected males from each group and females not delivering litters will be sacrificed and necropsied. Uteri will be stained with ammonium sulfide solution to determine pregnancy. If there is no evidence of reduced fertility, the remaining males will be externally examined, sacrificed and discarded at this time.

Tissues will be saved from the above F_0 parental animals and F_1 pups as directed in Section XVI.E.2.

---

[1]Staples, R. E. (1974). Detection of visceral alterations in mammalian fetuses. Teratology, 9: A37-A38.

XVI. OBSERVATIONS AND EXAMINATIONS (continued)

E. Pathology

1. Animals Dying on Test or Sacrificed in Extremis: A gross necropsy will be performed on all rats not surviving to scheduled sacrifice in an attempt to determine the cause of death. The fetuses from dams dying during gestation will be examined externally to the fullest possible extent and discarded. Pups from dams which die during the lactation period will be externally examined, sacrificed and necropsied.

   The thoracic and abdominal cavities and organs of the animals will be examined for grossly evident morphological changes and the carcasses discarded. Tissues from the rats will be discarded except for macroscopic lesions which will be saved in neutral buffered formalin for histopathological examination.

2. Histopathology: The following tissues and organs from animals specified below will be preserved at necropsy in 10% neutral buffered formalin. Underlined tissues will be examined microscopically for the high dose and control groups.

   1. F_0 parental animals - 10/sex/group

   2. F_1 pups - 10/sex/group

adrenal (2)	ovaries (2)
aorta (abdominal)	pancreas
bone	pituitary
bone marrow	prostate/seminal vesicles
brain (2 levels)	salivary gland
esophagus	skeletal muscle (biceps femoris, right)
eye (including optic nerve and Harderian gland, right)	skin (inguinal, taken with mammary gland)
heart	spleen
intestine (2)	spinal cord (cervical)
colon	stomach
duodenum	testes (with epididymides) (2)
kidneys (2)	thymus
liver (sections from at least 2 lobes)	thyroid (with parathyroid)
lungs (with mainstem bronchi) (2)	trachea
lymph nodes (mesenteric)	urinary bladder
mammary gland (inguinal)	uterus (corpus and cervix uteri)
nerve (sciatic)	gross lesions (including a section of apparently normal contiguous tissue, if possible)
	tissue masses

XVII. STATISTICAL ANALYSIS

All statistical analyses will compare the treatment groups to the control group with the level of significance at $p < 0.05$ and $p < 0.01$.

The male and female fertility indices will be compared using the Chi-square test criterion with Yates' correction for 2 x 2 contingency tables and/or Fisher's exact probability test as described by Siegel[2] to judge significance of differences. Pup survival indices will be compared by the Mann-Whitney U-test as described by Siegel[2] and Weil[3] to judge significance of differences.

Parental body weights (at week prior to mating and at termination of generation), mean number of live pups per litter at birth and mean pup body weights taken on lactation days 0, 4, 7, 14 and 21 will be compared by analysis of variance (one-way classification), Bartlett's test for homogeneity of variances and the appropriate t-test (for equal and unequal variances), as described by Steel and Torrie[4] using Dunnett's multiple comparison tables[5] to judge significance of differences.

XVIII. REPORT

A comprehensive report will be prepared upon completion of the study. The final report will contain a summary, experimental design and methods, evaluation of the test results, and data and measurements required by this protocol. The report will include the following:

A. Text

1. Experimental design
2. Survival data
3. Results of significant daily observations
4. Body weights
5. Necropsy and histopathologic findings
6. Results of parturition and litter observations

---

[2]Siegel, S. (1956). Nonparametric Statistics for the Behavioral Sciences. McGraw-Hill, New York, N.Y.

[3]Weil, C. S. (1970). Selection of the valid number of sampling units and a consideration of their combination in toxicological studies involving reproduction, teratogenesis or carcinogenesis. Food Cosmet. Toxicol., 8: 177-182.

[4]Steel, R. G. D. and Torrie, J. H. (1960). Principles and Procedures of Statistics. McGraw-Hill, New York, N.Y.

[5]Dunnett, C. W. (1964). New tables for multiple comparisons with a control. Biometrics, 51: 482-491.

XVIII. REPORT (continued)

B. Tables

1. Estrous cycle determinations (individual)
2. F_0 male and female weekly body weights and survival (summary and individual)
3. Maternal body weights during gestation and lactation (summary, including body weight changes and individual)
4. Gestation and lactation data (summary and individual)
5. Uterine observations at weaning (individual)

C. Appendices

1. Test article data (if available)
2. Dates of Quality Assurance inspections and report of significant deviations from protocol
3. Historical control data

XIX. PERSONNEL HEALTH AND SAFETY

Normal safety precautions will be employed in the handling of the test article, unless otherwise indicated in Section IX.

XX. DATA AND SAMPLE RETENTION

All data, including reports from this study, will be retained for at least 10 years after completion of the study and stored in the IRDC Archives and will be made available for inspection upon request by authorized personnel of the Sponsor.

Tissues preserved in fixative will be retained for at least 5 years in the IRDC Archives. Paraffin embedded blocks and all tissue slides will be retained indefinitely in the IRDC Archives.

XXI. RECORDS TO BE MAINTAINED

A. Protocol and protocol addenda
B. Study schedule
C. Pre-initiation data
D. Technical personnel list with signatures
E. Source, purchase order, shipping labels and age records for animals
F. Sex verification records
G. Diet lot numbers and contaminant analyses records
H. Animal identification (ear tag records)
I. Room humidity and temperature records
J. General procedures
K. Scale and balance accuracy verification
L. Daily observation (room check) records

XXI. RECORDS TO BE MAINTAINED (continued)

M. Weekly detailed observations for pharmacotoxic signs, and general appearance and behavior
N. Body weight records
O. Food consumption records
P. Test article data
Q. Test article preparation instructions
R. Test article preparation records
S. Test article administration records
T. Date and type of termination for each animal in the study, i.e., spontaneous death, accidental death, sacrificed in extremis (unscheduled sacrifice), or scheduled sacrifice
U. Necropsy records
V. Randomization data
W. Quality Assurance inspections
X. Drinking water analysis
Y. Miscellaneous study data

XXII. QUALITY ASSURANCE AND GOOD LABORATORY PRACTICES

This nonclinical laboratory study will be conducted in accordance with the Good Laboratory Practice Regulations.

The study will be subjected to periodic inspections, and the final report will be reviewed, by IRDC's Quality Assurance Department in accordance with IRDC's Standard Operating Procedures. Study quality assurance inspection records will be made available to the Sponsor during Sponsor visits to IRDC.

XXIII. STATEMENT OF COMPLIANCE

The final report will include a statement signed by the Study Director that the Final Report accurately reflects the raw data obtained during the performance of the study and that there were no significant deviations from the Good Laboratory Practice Regulations which affected the quality or integrity of the study. If deviations are encountered that will affect the quality or integrity of the study, each deviation will be described in detail.

XXIV. ALTERATION OF DESIGN

Alterations of this protocol may be made as the study progresses. No changes in the protocol will be made without the specific written request or consent of the Sponsor. In the event that the Sponsor authorizes a protocol change verbally, such change will be honored by IRDC. However, it then becomes the responsibility of the Sponsor to follow such verbal change with a written verification. All protocol modifications will be signed by the Study Director.

3012

XXV. DECLARATION OF INTENT

This study is intended to support (Sponsor should initial where appropriate):

A. Registration or notification of a product or chemical by the U.S. Environmental Protection Agency _____

B. Application for research and/or marketing permits for a product regulated by the U.S. Food and Drug Administration _____

C. Neither of the above RSN

Approved by Sponsor	Issued by
MONSANTO CHEMICAL COMPANY	INTERNATIONAL RESEARCH AND DEVELOPMENT CORPORATION
By: Rashmi Nair	By: James L. Schardein
Dr. Rashmi Nair	James L. Schardein, M.S.
Title: Sr Product Toxicologist	Title: Director of Reproduction and Teratology
Date: 9/22/82	Date: 9/10/82

30 RJ

XXV. DECLARATION OF INTENT

This study is intended to support (Sponsor should initial where appropriate):

A. Registration or notification of a product or chemical by the U.S. Environmental Protection Agency _____

B. Application for research and/or marketing permits for a product regulated by the U.S. Food and Drug Administration _____

C. Neither of the above RSN

Approved by Sponsor

MONSANTO CHEMICAL COMPANY

By: Rashmi Nair
Dr. Rashmi Nair

Title: Sr. Product Toxicology

Date: 9/22/82

Issued by

INTERNATIONAL RESEARCH AND DEVELOPMENT CORPORATION

By: James L. Schardein
James L. Schardein, M.S.

Title: Director of Reproduction and Teratology

Date: 9/16/82

SAMPLE SUBMISSION FORM

304

STUDY NUMBER: IRDC Study No. 401-177
Monsanto No. IR-81-321

I. SAMPLE IDENTIFICATION:

Product Names:

Elemental phosphorus (yellow sticks, 5/8" diameter)

CP Number:

Lot or I.D. No., Notebook Reference:

IRDC No. 7481B

Sample Disposition

II. CHEMICAL AND PHYSICAL PROPERTIES:

See Attached Sheet

Storage and Stability

Stored in accordance with DOT Regulations

III. TOXICITY INFORMATION:

Chronic poisoning occurs from long continued absorption through the lungs and gastrointestinal tract.

IV. DOCUMENTATION:

Composition and Purity

Method of Synthesis

Lot Fisher 731628

ATTACHMENT 3 CONTAINS NO CBI

3069

Monsanto MATERIAL SAFETY DATA

MONSANTO PRODUCT NAME

PHOSPHORUS

MONSANTO COMPANY
800 N. LINDBERGH BLVD.
ST. LOUIS, MO 63167

Emergency Phone No.
(Call Collect)
314-694-1000

PRODUCT IDENTIFICATION

Synonym(s):	P_4; "Phos"; Elemental phosphorus, white; Elemental phosphorus, yellow
Chemical Name:	Phosphorus
Chemical Formula:	P_4
Chemical Family:	Phosphorus
CAS No.:	7723-14-0
DOT Proper Shipping Name:	Phosphorus, white, in water
DOT Hazard Class/ I.D. No.:	Flammable Solid, Poison UN1381
DOT Label(s):	Flammable Solid and Poison
U.S. Surface Freight Classification:	Phosphorus, white, in water
Reportable Quantity (RQ) Under U.S. EPA CERCLA and DOT Regulations:	1 lb.
Hazardous Chemical(s) Under OSHA Hazard Communication Standard:	This substance is identified as a hazardous chemical under the criteria of the OSHA Hazard Communication Standard (29 CFR 1910.1200):
	[illegible]osphorus, CAS Reg. No. 7723-14-0

WARNING STATEMENTS

DANGER!
POISON!
EXTREMELY FLAMMABLE
CATCHES FIRE IF EXPOSED TO AIR
CAUSES SEVERE BURNS TO EYES AND SKIN
MAY BE FATAL IF SWALLOWED
VAPOR AND SMOKE OR FUMES FROM BURNING PHOSPHORUS CAUSE IRRITATION TO RESPIRATORY TRACT

PRECAUTIONARY MEASURES

Contents packed under water and will ignite if water is removed.
Do not get in eyes, on skin, on clothing.
Avoid breathing vapor or fume from burning phosphorus.
Avoid breathing vapor, mist or dust.
Keep container closed.
Use with adequate ventilation.
Wash thoroughly after handling.

Drum Disposal: Emptied container retains vapor and product residue. Observe all labeled safeguards until container is destroyed. DO NOT REUSE THIS CONTAINER. DO NOT CUT OR WELD ON OR NEAR THIS CONTAINER.

Bulk Container: The hazardous nature of tank inspection, cleaning, repairs, etc requires *trained personnel familiar with the hazards involved.* Emptied tank retains vapor and product residue. DO NOT CUT OR WELD ON OR NEAR THIS CONTAINER.

EMERGENCY AND FIRST AID PROCEDURES

POISON: CALL A PHYSICIAN.

FIRST AID: IF IN EYES OR ON SKIN, immediately flush with plenty of water for at least 15 minutes and immediately remove contaminated clothing and shoes. Keep skin area wet until medical attention is obtained. Destroy contaminated clothing and shoes.

IF SWALLOWED, induce vomiting immediately by giving two glasses of water and sticking finger down throat. NEVER GIVE ANYTHING BY MOUTH TO AN UNCONSCIOUS PERSON.

IF PHOSPHORUS OR SMOKE AND FUMES FROM BURNING PHOSPHORUS ARE INHALED, remove to fresh air. If not breathing, give artificial respiration, preferably mouth-to-mouth. If breathing is difficult, give oxygen.

IN CASE OF: FIRE, SPILL OR LEAK, cover with water, sand or earth.

OCCUPATIONAL CONTROL PROCEDURES

Eye Protection: When small quantities are handled and may come in contact with air, a shield is recommended. When bulk quantities are being handled, a fire-resistant face shield integrated with a whole head hood is recommended (See Skin Protection). Provide an eye bath were there is potential for eye contact.

Skin Protection: Where material is likely to be handled in pure form, fire-resistant apparel should be used. Consult glove and body apparel manufacturer to determine appropriate glove/clothing for your application. Wash immediately if skin is contaminated. Launder contaminated equipment before reuse. Provide a safety shower at any location where skin contact can occur. Wash thoroughly after handling.

Respiratory Protection: Avoid breathing dust, vapor or mist. Use NIOSH/MSHA approved equipment when airborne exposure limits are exceeded. Full facepiece equipment is recommended and, if used, replaces need for face shield and/or chemical splash goggles. Consult respirator manufacturer to determine appropriate type equipment for given application. The respirator use limitations specified by NIOSH/MSHA or the manufacturer must be observed. High airborne concentrations may require use of self-contained breathing apparatus or supplied air respirator. Respiratory protection programs must be in compliance with 29 CFR 1910.134.

(Occupational Control Procedures Continued On The Next Page)

OCCUPATIONAL CONTROL PROCEDURES (Continued)

Ventilation: Provide ventilation to control exposure levels below airborne exposure limits. Use local mechanical exhaust ventilation at sources of air contamination such as open process equipment. Consult NFPA Standard 91 for design of exhaust systems.

Airborne Exposure Limits: Product: Phosphorus

OSHA PEL: 0.1 mg/m³ 8-hour time-weighted average
ACGIH TLV: 0.1 mg/m³ 8-hour time-weighted average
0.3 mg/m³ short-term exposure limit - 1985-86 Proposed Deletion

Note: In light of a recent reproductive study in rats that demonstrated difficulty in delivery for some female rats, Monsanto has adopted an internal restriction for pregnant females where exposure exceeds 0.01 mg/m³ 8-hour time-weighted average. Monsanto considers this a prudent and responsible precaution until further studies are performed and evaluated.

FIRE PROTECTION INFORMATION

Waxy solid

Melting Point: 111°F

Ignition Temperature: Ignites spontaneously on contact with air. Explosive when mixed with oxidizing materials.

Extinguishing Media: Fire can be controlled by carefully covering, avoid splashing with water, moist sand or dirt to exclude air. Apply cold water spray to freeze the liquid and stop leaks.

Special Fire Fighting Procedures: Fire fighters and others who may be exposed to products of combustion should wear full protective clothing and self-contained breathing apparatus. Fire fighting equipment should be thoroughly decontaminated after use.

Unusual Fire or Explosion Hazards: If intense fire melts tank insulation, there is risk of explosion from steam or phosphoric vapor pressure. If cooling cannot be applied, either vent the tank or evacuate the area. Burning produces dense white irritating fumes of phosphorus pentoxide and H_3PO_4.

REACTIVITY DATA

Materials to Avoid: Avcid contact with air (ignites spontaneously on exposure), oxidizing agents, strong bases or basic solutions.

Hazardous Decomposition Products: On combustion, releases dense, white, irritating fumes of P_2O_5 or, if moisture is present, H_3PO_4. With strong bases, releases highly toxic and spontaneously ignitable phosphine (PH_3) gas.

Hazardous Polymerization: Above about 200°C (392°F), polymerizes exothermically to red phosphorus. May then heat uncontrollably to develop vapor pressure above tank bursting pressure.

HEALTH EFFECTS SUMMARY

The following information presents both human experience and the results of scientific experiments used by qualified experts to assess the effects of phosphorus on the health of industrially exposed individuals and to support the Precautionary Statements and Occupational Control Procedures recommended in this document. To avoid misunderstanding, the data provided in this section should be interpreted by individuals trained in evaluation of this type of information.

Dermal contact and inhalation are expected to be the primary routes of occupational exposure to phosphorus. Phosphorus can be absorbed through the skin, respiratory tract and gastrointestinal tract. Phosphorus ignites and burns spontaneously when exposed to air and the vapor produced is irritating to the eyes, nose, throat and lungs. The solid in contact with the skin or eyes produces severe burns. Phosphorus fume is an irritant to the respiratory tract and eyes.

The acute lethal oral dose of phosphorus for an adult is reported to be about 1 mg/kg, with adverse effects reported at 0.1 mg/kg. Acute oral phosphorus intoxication is usually described as having two stages. In the initial phase, gastrointestinal effects, characterized by nausea, vomiting, belching, and severe abdominal pain predominate. Death from cardiovascular collapse can occur in about 12 hours or symptoms may regress with an apparent recovery lasting approximately two days. The second phase may be characterized by return of gastrointestinal distress with signs of hepatic, cardiovascular and renal involvement, including jaundice, oliguria, pitting edema, increased pulse rate, low blood pressure, and coma.

Early signs of chronic systemic intoxication by phosphorus are reported to include anemia, loss of appetite, gastrointestinal distress, chronic cough, a phosphorus garlic-like odor of the breath, and pallor. A common response to severe chronic poisoning is necrosis of the mandible or maxilla (jawbone), known as "phossy jaw." The first indications of "phossy jaw" are toothache and excessive salivation, followed by loosening of teeth, severe pain, and swelling of the jaw. Ulcerations can develop which may invade the bone.

Toxicological Data

Data from Monsanto studies and from the scientific literature indicate the following:

Oral LD_{50} (Male Rat): 3.76 mg/kg, Highly Toxic
Oral LD_{50} (Female Rat): 3.03 mg/kg, Highly Toxic
Oral LD_{50} (Male Mice): 4.85 mg/kg, Highly Toxic
Oral LD_{50} (Female Mice): 4.82 mg/kg, Highly Toxic

Bone changes were reported in female rats (23 days old) given phosphorus at a dietary level of 1.30 mg/kg/day for 8 or 16 days. In the animals treated for 16 days, the bone changes were reversed following withdrawal of the test diet.

Depressed growth was reported in a 22-week feeding study in young female rats fed diets containing phosphorus at median daily dosage levels of 0.0032, 0.018, and 0.072 mg/kg/day. A recovery in growth occurred at the mid-dose level following withdrawal of phosphorus from the diet; no recovery in growth was reported at the high-dose level. Old male rats fed diets containing 0.0027 mg/kg/day displayed no overt effects. Pathology and bone studies were not performed.

In a subchronic toxicity study, female dogs were injected subcutaneously with 0.1, 0.2 or 0.4 mg phosphorus/kg/day. Mortality resulted within 6 days in animals given 0.4 mg/kg. The one animal given 0.2 mg/kg developed severe kidney hemorrhage and died by day 12. Fatty livers, hydropic degeneration in the kidneys, body weight loss, and changes in blood chemistry parameters were reported in dogs surviving treatment with 0.1 mg/kg/day for 116 days.

Retardation of longitudinal bone growth and body weight gain were reported in rabbits orally given 0.6 mg phosphorus/day, via capsule, for periods of 13 to 117 days. Similar effects were noted in rats treated for 22 to 57 days with cod liver oil containing 0.1% phosphorus mixed in the diet. Disturbance of dentin calcification in the teeth of rats was also reported.

(Health Effects Summary Continued On The Next Page)

HEALTH EFFECTS SUMMARY (Continued)

Phosphorus was administered to rats by subcutaneous injection of oil solutions at dosages ranging from 0.05 to 3.2 mg/kg/day twice weekly for periods up to 610 days. Guinea pigs were injected subcutaneously with similar solutions at dosages of 0.05 to 0.4 mg/kg/day twice weekly for up to 720 days. In the rats, mortality was reported to increase with increasing dosage. Bone pathology (reported to be more marked in rats than in guinea pigs) was observed in an apparent dose-related fashion. Less conspicuous bone changes were noted in rats fed diets containing phosphorus in peanut oil at dosages of 0.2 to 16 mg/kg/day for 174 to 512 days. Mortality was reported to increase in these rats with increase in the total amount of phosphorus administered. The decreased growth rate observed in rats fed phosphorus in the diet was attributed to decreased food consumption.

Phosphorus in corn oil was administered by gavage to female rats at dosages of 0, 0.1, 0.3 or 0.75 mg/kg/day on days 6 through 19 of gestation. A second, satellite study was conducted in which rats received either 0.6 mg phosphorus/kg/day in corn oil or corn oil (control) on a comparable regimen. Due to significant maternal mortality (84%) at 0.75 mg/kg, no fetal evaluations were performed at this dosage. Decreased mean body weights were noted in surviving dams at 0.75 mg/kg. No teratogenic or fetotoxic effects were observed at dosages of 0.6 mg/kg or less. Mortality and decreased mean body weight gain were noted in dams at 0.6 mg/kg.

Administration of phosphorus in corn oil to male and female rats by gavage at doses of 0.005, 0.015, and 0.075 mg/kg/day throughout premating, mating, gestation, and lactation periods for one generation resulted in increased mortality among females of the high dose group during day 21 or 22 of gestation after both the F_{1a} and F_{1b} matings. This observation suggests that deaths may have been related to difficulties in delivering. A reduction in the mean number of live pups was also observed at the highest dose. No pathologic or histopathologic lesions were reported in either parental animals or pups. The no-observable effect level was considered to be 0.015 mg/kg/day.

Following administration of single oral doses (0.3 mg/kg) of phosphorus to rats, elimination of phosphorus or its metabolites was reported to occur primarily in urine and feces. Approximately 46.7% and 33% of the absorbed radioactivity was excreted in the urine and feces, respectively, of rats within five days. Increases in total body burden were noted in rats dosed for five consecutive days compared to rats dosed once.

Additional Information

A Threshold Limit Value (TLV) has been established by the American Conference of Governmental Industrial Hygienists for phosphorus (P_4). For further information on this material, please refer to the current edition of the *Documentation of Threshold Values.*

Based on results of the one-generation reproduction study (discussed above), which reported adverse effects on pregnant rodents at the time of delivery, Monsanto considers it prudent to review job situations involving the handling and use of P_4 for possible restrictions for pregnant female workers. Work situations are evaluated within Monsanto to determine the extent of routine exposures, and the potential for accidental exposures, to phosphorus. Pregnant females will be restricted from areas where exposures are deemed significant (greater than 0.01 mg/m³ 8-hour time weighted average or where there is a significant potential for accidental exposure). This restriction will apply as soon as pregnancy is confirmed. Since the animal data suggest a potential for adverse effects during delivery, this restriction remains in effect for the pregnant female until after delivery.

PHYSICAL DATA

Appearance:	Waxy solid, normally pale yellow to straw-colored
Odor:	Mildly characteristic (phossy); fumes from burning phosphorus are pungent and sharp
Melting Point:	44.1°C (111°F)

(Physical Data Continued On The Next Page)

PHYSICAL DATA (Continued)

Boiling Point:	280.5°C (536.9°F)
Vapor Density (Air = 1):	4.42
Specific Gravity @ 20°C (69°F):	1.8231
@ 25°C (77°F):	1.8198
@ 50°C (122°F):	1.737
Solubility in Water @ 20°C (68°F):	0.003%

Note: These physical data are typical values based on material tested but may vary from sample to sample. Typical values should not be construed as a guaranteed analysis of any specific lot or as specification items.

EMERGENCY SPILL AND LEAK INFORMATION

Emergency Spill and Leak Information: When released to the environment in quantities equal to or exceeding one pound (0.454 kilograms), phosphorus is defined as a *hazardous substance* in the Comprehensive Environmental Response, Compensation and Liability Act of 1980 (Superfund) and in the current federal regulations 40 CFR, Part 116 (Section 311, Clean Water Act). As a result, notification of such a release is required to be made to the National Response Center (800-424-8802).

Contain all spilled material (i.e., earthen dike, sand, etc.) and apply a low pressure, cold water spray to extinguish fire and freeze contents. Continue applying water spray to prevent reignition and maintain water cover.

Disposal Information: Dispose of in accordance with all local, state, and federal regulations.

As currently defined in federal Resource Conservation & Recovery Act (RCRA) regulations, phosphorus, when discarded, is a hazardous waste exhibiting the characteristics of ignitability (D-001). See 40 CFR 261.21. Its disposal, therefore, is regulated federal RCRA regulations. Elemental phosphorus manufacturing facilities are currently exempt from RCRA regulations by 40 CFR 261.4(b)(7).

Disposal by incineration is recommended.

Consult your attorney or appropriate regulatory officials for information regarding spill, leak, and waste disposal requirements.

ADDITIONAL COMMENTS

Environmental Toxicity Information

Phosphorus is highly toxic to fish. The 48 to 96 hour LC_{50} for a variety of fish and invertebrates is less than 1 ppm. For additional data, the reader is referred to the National Technical Information Service (NTIS) publication "Mammalian Toxicology and Toxicity to Aquatic Organisms of Four Important Types of Waterborne Munitions Pollutants," March 1974, Technical Report 7403.

DATE: 5/1/86 **SUPERSEDES:** 7/1/83

MSDS NO.: 007723140

FOR ADDITIONAL NON-EMERGENCY INFORMATION, CONTACT:

MSDS Coordinator
Detergents
Monsanto Chemical Company
(314) 695-1000
(A Unit of Monsanto Company)

MATERIAL SAFETY DATA

Monsanto MATERIAL SAFETY DATA

IATERIAL SAFETY DATA

Phosphorus

ATTACHMENT 4

CONTAINS NO CBI

Monsanto

Monsanto Chemical Company
800 N. Lindbergh Boulevard
St. Louis, Missouri 63167
Phone: (314) 694-1000

September 5, 1989

Dear (Customer):

An industry consortium led by Monsanto recently completed the in-life portion of a reproductive effects study on elemental phosphorus, also known as white or yellow phosphorus. In this study rats were given the test material by gavage, i.e. dosed by stomach tube with phosphorus dissolved in a solvent. Dosing took place daily for 100 days prior to mating, throughout mating, and either through day 15 of gestation or throughout gestation. Preliminary results show the occurrence of deaths in treated female rats during the last two days of gestation and during the birthing process. The incidence of deaths was similar in the groups of rats whether dosed just through day 15 or throughout the entire gestation period.

These results indicate that stopping the dosing in rats at a time corresponding approximately to the end of the first trimester in humans still led to deaths. Accordingly Monsanto is changing its internal workplace protective measures for female employees.

Our past practice, as outlined on our MSDS dated 5/1/86, was to exclude pregnant female employees from areas in our plants where airborne elemental phosphorus concentrations might exceed 0.01 mg/m^3. Our new practice is to exclude women of childbearing potential from workplace areas where airborne concentration may exceed 0.01 mg/m^3. Assuming all inhaled phosphorus were absorbed during an 8-hour workday at 0.01 mg/m^3, the dose to a pregnant female would be less than that administered to rats. Thus there is still an adequate margin of safety at this airborne concentration and the protective measures are conservative and prudent. A copy of our revised MSDS dated 9/1/89 is enclosed for your files. Please discard the previous MSDS.

The test results were judged to meet EPA's reporting criteria under Section 8(e) of TSCA. Therefore, Monsanto, on behalf of the industry consortium,

submitted a summary of these results to the Agency. A copy of the letter and attachment is enclosed for your reference. If you have questions regarding the test results, the change in Monsanto's workplace protective measures or the submission to EPA, please contact me.

Sincerely,

James P. Mieure, Ph.D.
Manager, Product Safety

Enclosure

MONSANTO PRODUCT NAME

PHOSPHORUS

MONSANTO COMPANY
800 NORTH LINDBERGH BLVD.
ST. LOUIS, MO 63167

Emergency Phone No.
(Call Collect)
(314) 694-1000

PRODUCT IDENTIFICATION

Synonym(s): P4; "Phos"; Elemental phosphorus, white; Elemental phosphorus, yellow
Chemical Name: Phosphorus
Chemical Formula: P4
Chemical Family: Phosphorus
CAS No.: 7723-14-0
DOT Proper Shipping Name: Phosphorus, white, in water
DOT Hazard Class/I.D. No.: Flammable Solid, Poison UN1381
DOT Label(s): Flammable Solid and Poison
U.S. Surface Freight Classification: Phosphorus, white, in water
Reportable Quantity (RQ) Under U.S. EPA CERCLA and DOT Regulations: 1 lb.
SARA Hazard Notification:
Hazard Categories Under Criteria of SARA Title III Rules (40 CFR Part 370): Immediate, Delayed, Fire
Section 313 Toxic Chemical(s):
This product contains the following substance which is defined as a toxic chemical under, and subject to the reporting requirements of, Section 313 of Title III of the Superfund Amendments and Reauthorization Act of 1986 and 40 CFR Part 372:

Toxic Chemical Name	Chemical Abstracts Service Registry No.	Percent by Weight In Product
Phosphorus	7723-14-0	100

Hazardous Chemical(s) Under OSHA Hazard Communication Standard:
In addition, this substance is considered a hazardous chemical under the criteria of the OSHA Hazard Communication Standard, 29 CFR 1910.1200):

WARNING STATEMENTS

DANGER!
POISON!
EXTREMELY FLAMMABLE
CATCHES FIRE IF EXPOSED TO AIR
CAUSES SEVERE BURNS TO EYES AND SKIN
MAY BE FATAL IF SWALLOWED
VAPOR AND SMOKE OR FUMES FROM BURNING PHOSPHORUS CAUSE IRRITATION TO RESPIRATORY TRACT
POSSIBLE HAZARD TO PREGNANT WOMEN, BASED ON ANIMAL DATA

OCCUPATIONAL CONTROL PROCEDURES - CONTINUED

Ventilation: Provide ventilation to control exposure levels below airborne exposure limits. Use local mechanical exhaust ventilation at sources of air contamination such as open process equipment. Consult NFPA Standard 91 for design of exhaust systems.
Airborne Exposure Limits:

Phosphorus

OSHA PEL: 0.1 mg/m3 8-hour TWA
ACGIH TLV: 0.1 mg/m3 8-hour TWA

Note: Recent reproductive studies demonstrated increased maternal mortality in pregnant female rats. Monsanto has adopted an internal restriction to exclude women of childbearing potential where exposure may excede 0.01 mg/m^3 8-hour time-weighted average. Monsanto considers this a prudent and responsible precaution until further studies are performed and evaluated.

FIRE PROTECTION INFORMATION

Waxy solid

Melting Point: 111°F

Ignition Temperature: Ignites spontaneously on contact with air. Explosive when mixed with oxidizing materials.

Extinguishing Media: Fire can be controlled by carefully covering with moist sand or dirt to exclude air. Avoid splashing with water. Apply cold water spray to freeze the liquid and stop leaks.

Special Fire Fighting Procedures: Fire fighters and others who may be exposed to products of combustion should wear full protective clothing and self-contained breathing apparatus. Fire fighting equipment should be thoroughly decontaminated after use.

Unusual Fire or Explosion Hazards: If intense fire melts tank insulation, there is risk of explosion from steam or phosphoric vapor pressure. If cooling cannot be applied, either vent the tank or evacuate the area. Burning produces dense white irritating fumes of phosphorus pentoxide and H3PO4.

REACTIVITY DATA

Materials to Avoid: Avoid contact with air (ignites spontaneously on exposure), oxidizing agents, strong bases or basic solutions.

Hazardous Decomposition Products: On combustion, releases dense, white, irritating fumes of P2O5 or, if moisture is present, H3PO4. With strong bases, releases highly toxic and spontaneously ignitable phosphine (PH3) gas.

Hazardous Polymerization: Above about 200°C (392°F), polymerizes exothermically to red phosphorus. May then heat uncontrollably to develop vapor pressure above tank bursting pressure.

HEALTH EFFECTS SUMMARY

The following information summarizes human experience and the results of scientific investigations reviewed by health professionals for hazard evaluation of phosphorus and development of Precautionary Statements and Occupational Control Procedures recommended in this document.

Effects of Exposure

Dermal contact and inhalation are expected to be the primary routes of occupational exposure to phosphorus. Phosphorus can be absorbed through the skin, respiratory tract and gastrointestinal tract. Phosphorus ignites and burns spontaneously when exposed to air and the vapor produced is irritating to the eyes, nose, throat and lungs. The solid in contact with the skin or eyes produces severe burns. Phosphorus fume is an irritant to the respiratory tract and eyes.

The acute lethal oral dose of phosphorus for an adult is reported to be about 1 mg/kg, with adverse effects reported at 0.1 mg/kg. Acute oral phosphorus intoxication is usually described as having two stages. In the initial phase, gastrointestinal effects, characterized by nausea, vomiting, belching, and severe abdominal pain predominate. Death from cardiovascular collapse can occur in about 12 hours or symptoms may regress with an apparent recovery lasting approximately two days. The second phase may be characterized by return of gastrointestinal distress with signs of hepatic, cardiovascular and renal involvement, including jaundice, oliguria, pitting edema, increased pulse rate, low blood pressure, and coma.

Early signs of chronic systemic intoxication by phosphorus are reported to include anemia, loss of appetite, gastrointestinal distress, chronic cough, a phosphorus garlic-like odor of the breath, and pallor. A common response to severe chronic poisoning is necrosis of the mandible or maxilla (jawbone), known as "phossy jaw." The first indications of "phossy jaw" are toothache and excessive salivation, followed by loosening of teeth, severe pain, and swelling of the jaw. Ulcerations can develop which may invade the bone.

Although no data are available on the effects of phosphorus in pregnant women, this material was reported to produce a high incidence of deaths in experimental animals during late pregnancy and delivery. Workplace controls for phosphorus exposure may be necessary to prevent significant exposures to women of child-bearing potential.

Toxicological Data

Data from Monsanto studies and from the scientific literature indicate the following:

Oral LD50 (Male Rat): 3.76 mg/kg, Highly Toxic
Oral LD50 (Female Rat): 3.03 mg/kg, Highly Toxic
Oral LD50 (Male Mice): 4.85 mg/kg, Highly Toxic
Oral LD50 (Female Mice): 4.82 mg/kg, Highly Toxic

Bone changes were reported in female rats (23 days old) given phosphorus at a dietary level of 1.30 mg/kg/day for 8 or 16 days. In the animals treated for 16 days, the bone changes were reversed following withdrawal of the test diet.

Depressed growth was reported in a 22-week feeding study in young female rats fed diets containing phosphorus at median daily dosage levels of 0.0032, 0.018, and 0.072 mg/kg/day. A recovery in growth occurred at the mid-dose level following withdrawal of phosphorus from the diet; no recovery in growth was reported at the high-dose level. Old male rats fed diets containing 0.0027 mg/kg/day displayed no overt effects. Pathology and bone studies were not performed.

HEALTH EFFECTS SUMMARY - CONTINUED

In a subchronic toxicity study, female dogs were injected subcutaneously with 0.1, 0.2 or 0.4 mg phosphorus/kg/day. Mortality resulted within 6 days in animals given 0.4 mg/kg. The one animal given 0.2 mg/kg developed severe kidney hemorrhage and died by day 12. Fatty livers, hydropic degeneration in the kidneys, body weight loss, and changes in blood chemistry parameters were reported in dogs surviving treatment with 0.1 mg/kg/day for 116 days.

Retardation of longitudinal bone growth and body weight gain were reported in rabbits orally given 0.6 mg phosphorus/day, via capsule, for periods of 13 to 117 days. Similar effects were noted in rats treated for 22 to 57 days with cod liver oil containing 0.1% phosphorus mixed in the diet. Disturbance of dentin calcification in the teeth of rats was also reported.

Phosphorus was administered to rats by subcutaneous injection of oil solutions at dosages ranging from 0.05 to 3.2 mg/kg/day twice weekly for periods up to 610 days. Guinea pigs were injected subcutaneously with similar solutions at dosages of 0.05 to 0.4 mg/kg/day twice weekly for up to 720 days. In the rats, mortality was reported to increase with increasing dosage. Bone pathology (reported to be more marked in rats than in guinea pigs) was observed in an apparent dose-related fashion. Less conspicuous bone changes were noted in rats fed diets containing phosphorus in peanut oil at dosages of 0.2 to 16 mg/kg/day for 174 to 512 days. Mortality was reported to increase in these rats with increase in the total amount of phosphorus administered. The decreased growth rate observed in rats fed phosphorus in the diet was attributed to decreased food consumption.

Phosphorus in corn oil was administered by gavage to female rats at dosages of 0, 0.1, 0.3 or 0.75 mg/kg/day on days 6 through 19 of gestation. A second, satellite study was conducted in which rats received either 0.6 mg phosphorus/kg/day in corn oil or corn oil (control) on a comparable regimen. Due to significant maternal mortality (84%) at 0.75 mg/kg, no fetal evaluations were performed at this dosage. Decreased mean body weights were noted in surviving dams at 0.75 mg/kg. No teratogenic or fetotoxic effects were observed at dosages of 0.6 mg/kg or less. Mortality and decreased mean body weight gain were noted in dams at 0.6 mg/kg.

Administration of phosphorus in corn oil to male and female rats by gavage at doses of 0.005, 0.015, and 0.075 mg/kg/day throughout premating, mating, gestation, and lactation periods for one generation resulted in increased mortality among females of the high dose group during day 21 or 22 of gestation after both the F1a and F1b matings. This observation suggests that deaths may have been related to difficulties in delivering. A reduction in the mean number of live pups was also observed at the highest dose. No pathologic or histopathologic lesions were reported in either parental animals or pups. The no-observable effect level was considered to be 0.015 mg/kg/day. A similar study was conducted at a signle dose level of 0.075 mg/kg/day as a follow up to the earlier reproduction study. Preliminary results confirm earlier findings in that death in females was increased during late pregnancy and delivery. Death was also increased in female rats dosed only through day 15 of pregnancy.

Following administration of single oral doses (0.3 mg/kg) of phosphorus to rats, elimination of phosphorus or its metabolites was reported to occur primarily in urine and feces. Approximately 46.7% and 33% of the absorbed radioactivity was excreted in the urine and feces, respectively, of rats within five days. Increases in total body burden were noted in rats dosed for five consecutive days compared to rats dosed once.

Additional Information

Two reproduction studies with phosphorus in experimental animals reported increased deaths late in pregnancy and during delivery. As a result of these effects reported in experimental animals, Monsanto considers it prudent to review job situations involving the handling and use of phosphorus for possible restrictions for pregnant female workers. Work situations are evaluated within Monsanto to determine the extent of routine exposures, and the potential for accidental exposures, to phosphorus. Women of child-bearing potential will be restricted from areas where exposures are deemed significant (greater than 0.01 mg/m3 8-hour time-weighted average or hwere there is a high potential for accidental exposure).

HEALTH EFFECTS SUMMARY - CONTINUED

A Threshold Limit Value (TLV) has been established by the American Conference of Governmental Industrial Hygienists for phosphorus (P4). For further information on this material, please refer to the current edition of the Documentation of the Threshold Values and Biological Indices.

PHYSICAL DATA

Appearance: Waxy solid, normally pale yellow to straw-colored

Odor: Mildly characteristic (phossy); fumes from burning phosphorus are pungent and sharp

Melting Point: 44.1°C (111°F)

Boiling Point: 280.5°C (536.9°F)

Vapor Density (Air = 1): 4.42

Specific Gravity @ 20°C (69°F): 1.8231
@ 25°C (77°F): 1.8198
@ 50°C (122°F): 1.737

Solubility in Water @ 20°C (68°F): 0.003%

NOTE: These physical data are typical values based on material tested but may vary from sample to sample. Typical values should not be construed as a guaranteed analysis of any specific lot or as specification items.

SPILL, LEAK & DISPOSAL INFORMATION

Emergency Spill and Leak Information: When released to the environment in quantities equal to or exceeding one pound (0.454 kilograms), phosphorus is defined as a hazardous substance in the Comprehensive Environmental Response, Compensation and Liability Act of 1980 (Superfund) and in the current federal regulations 40 CFR, Part 116 (Section 311, Clean Water Act). As a result, notification of such a release is required to be made to the National Response Center (800-424-8802).

Contain all spilled material (i.e., earthen dike, sand, etc.) and apply a low pressure, cold water spray to extinguish fire and freeze contents. Continue applying water spray to prevent reignition and maintain water cover.

Disposal Information: Dispose of in accordance with all local, state, and federal regulations.

As currently defined in federal Resource Conservation & Recovery Act (RCRA) regulations, phosphorus, when discarded, is a hazardous waste exhibiting the characteristics of ignitability (D-001). See 40 CFR 261.21. Its disposal, therefore, is regulated federal RCRA regulations. Elemental phosphorus manufacturing facilities are currently exempt from RCRA regulations by 40 CFR 261.4(b)(7).

Disposal by incineration is recommended.

Consult your attorney or appropriate regulatory officials for information regarding spill, leak, and waste disposal requirements.

3/6

ADDITIONAL COMMENTS

Environmental Toxicity Information

Phosphorus is highly toxic to fish. The 48 to 96 hour LC50 for a variety of fish and invertebrates is less than 1 ppm. For additional data, the reader is referred to the National Technical Information Service (NTIS) publication "Mammalian Toxicology and Toxicity to Aquatic Organisms of Four Important Types of Waterborne Munitions Pollutants," March 1974, Technical Report 7403.

DATE 9/5/89 **SUPERSEDES** 5/1/86
MSDS NUMBER 007723140

FOR ADDITIONAL NON-EMERGENCY INFORMATION, CONTACT:

MSDS Coordinator
Detergents
Monsanto Chemical Company
(314) 695-1000
(A Unit of Monsanto Company)